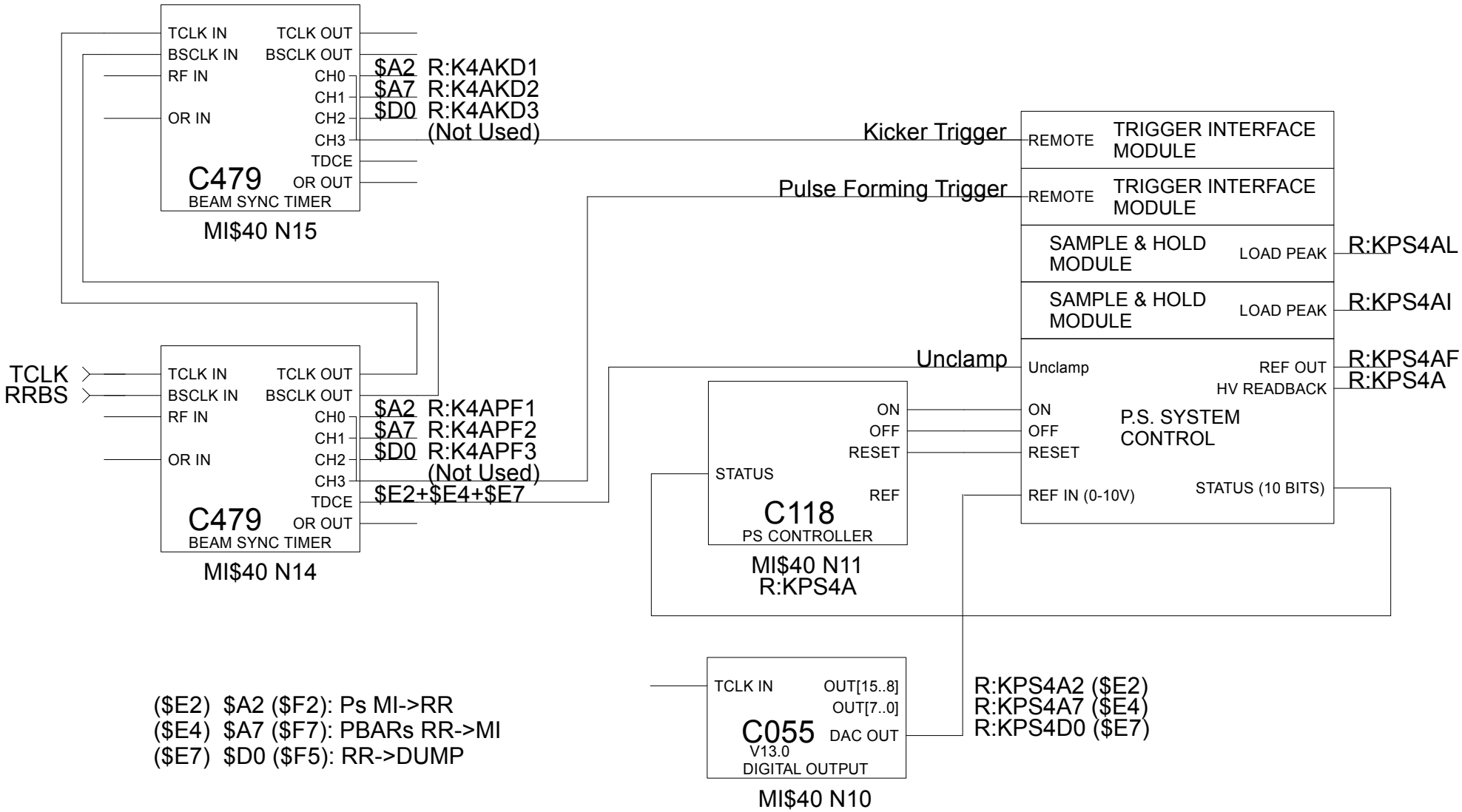

RR40 Kicker Controls
25-Jun-2008