EVENT	HCRM		PAGE
$00	16	0	6,13
$01	-	-	-
$02	2	1	1,15
$03	-	-	-
$04	-	-	-
$05	7	13	3,12
$06	-	-	-
$07	1	4	1,15
$08	14	0	5,13
$09	12	8	4,14
$0A	7	1	3,14
$0B	5	15	2,12
$0C	14	15	5,13
$0D	12	12	4,12
$0E	3	13	1,13
$0F	1	5	1,15

EVENT	HCRM		PAGE
$10	3	12	1,8
$11	14	1	5,13
$12	14	2	5,13
$13	14	3	5,13
$14	14	4	5,13
$15	14	5	5,13
$16	14	6	5,13
$17	14	7	5,13
$18	6	10	2,12
$19	14	8	5,13
$1A	16	12	6,13
$1B	16	13	6,13
$1C	14	9	5,13
$1D	14	10	5,13
$1E	5	5	2,13
$1F	5	6	2,13

EVENT	HCRM		PAGE
$20	15	0	6,13
$21	15	1	6,13
$22	3	11	1,10
$23	15	2	6,13
$24	10	6	4,14
$25	3	14	1,10
$26	3	15	1,10
$27	1	10	1,14
$28	9	5	3,13
$29	15	9	6,13
$2A	15	10	6,13
$2B	15	11	6,13
$2C	4	15	2,9
$2D	15	13	6,13
$2E	15	14	6,13
$2F	1	11	1,10

EVENT	HCRM		PAGE
$30	13	3	5,13
$31	6	8	2,11
$32	-	-	-
$33	-	-	-
$34	5	7	2,10
$35	7	14	3,12
$36	7	15	3,12
$37	-	-	-
$38	9	13	3
$39	9	14	3,7
$3A	10	7	4,11
$3B	10	13	4,12
$3C	4	6	2,11
$3D	3	4	1,11
$3E	-	-	-
$3F	3	3	1,11

EVENT	HCRM		PAGE
$40	16	4	6,13
$41	16	2	6,13
$42	2	7	1,11
$43	2	8	1,11
$44	2	9	1,11
$45	1	14	1,9
$46	1	15	1,11
$47	2	4	1,14
$48	2	5	1,14
$49	6	5	2,8
$4A	1	2	1,8
$4B	9	7	3,11
$4C	9	8	3,11
$4D	16	5	6,13
$4E	4	13	2,13
$4F	10	0	4,10

EVENT	HCRM		PAGE
$50	5	11	2,12
$51	5	12	2,12
$52	9	11	3,14
$53	9	12	3,14
$54	16	3	6,13
$55	7	7	3,7
$56	-	-	-
$57	8	0	3,7
$58	-	-	-
$59	6	15	2,12
$5A	-	-	-
$5B	8	2	3,7
$5C	8	3	3,7
$5D	16	7	6,13
$5E	12	6	4,13
$5F	11	12	4,7

EVENT	HCRM		PAGE
$60	1	6	1,11
$61	1	7	1
$62	1	8	1,11
$63	2	11	1,11
$64	2	12	1,11
$65	9	15	3
$66	8	9	3,10
$67	9	2	3
$68	3	1	1,11
$69	9	6	3
$6A	5	1	2,11
$6B	5	2	2,11
$6C	9	3	3
$6D	8	15	3,12
$6E	1	12	1,11
$6F	3	7	1,12

EVENT	HCRM		PAGE
$70	8	11	3,10
$71	1	9	1,11
$72	10	9	4,12
$73	9	9	3,11
$74	1	13	1,11
$75	2	15	1,10
$76	9	10	3,11
$77	1	3	1,7
$78	2	10	1,11
$79	6	7	2,13
$7A	5	3	2,13
$7B	3	5	1,9
$7C	6	0	2,7
$7D	8	13	3,12
$7E	10	10	4,12
$7F	9	1	3,9

EVENT	HCRM		PAGE
$80	16	15	6,13
$81	4	5	2,7
$82	5	14	2,12
$83	4	9	2,12
$84	7	10	3,12
$85	16	6	6,13
$86	8	4	3,7
$87	8	7	3,7
$88	7	0	3
$89	-	-	-
$8A	-	-	-
$8B	-	-	-
$8C	6	2	2,7
$8D	13	5	5,13
$8E	13	6	5,13
$8F	12	15	4,14

EVENT	HCRM		PAGE
$90	6	9	2,12
$91	16	14	6,13
$92	7	8	3,12
$93	16	8	6,13
$94	7	2	3,7
$95	7	9	3,12
$96	13	4	5,13
$97	7	11	3,7
$98	7	12	3,7
$99	8	8	3,7
$9A	3	2	1,11
$9B	10	3	4,7
$9C	12	10	4,14
$9D	-	-	4,10
$9E	-	-	4,10
$9F	-	-	-

EVENT	HCRM		PAGE
$A0	-	-	-
$A1	-	-	-
$A2	6	11	2,12
$A3	4	7	2,11
$A4	4	8	2,12
$A5	13	1	5,13
$A6	2	3	1,13
$A7	11	1	4,??
$A8	11	14	4
$A9	10	15	4,7
$AA	-	-	-
$AB	-	-	-
$AC	-	-	-
$AD	2	13	1,9
$AE	2	14	1,9
$AF	-	-	-

EVENT	HCRM		PAGE
$B0	-	-	-
$B1	-	-	-
$B2	-	-	-
$B3	-	-	-
$B4	-	-	-
$B5	-	-	-
$B6	-	-	-
$B7	-	-	-
$B8	12	11	4
$B9	-	-	-
$BA	-	-	-
$BB	12	4	4
$BC	12	5	4
$BD	-	-	-
$BE	-	-	-
$BF	-	-	-

EVENT	HCRM		PAGE
$C0	6	13	2,12
$C1	9	4	3,8
$C2	10	11	4,12
$C3	11	3	4,12
$C4	11	4	4
$C5	11	10	4
$C6	11	11	4
$C7	2	2	1
$C8	-	-	-
$C9	11	5	4
$CA	11	6	4
$CB	8	10	3
$CC	11	7	4
$CD	12	3	4
$CE	2	6	1
$CF	10	12	4,11

EVENT	HCRM		PAGE
$D0	6	14	2,11
$D1	7	3	3,11
$D2	7	4	3,11
$D3	-	-	-
$D4	12	0	4
$D5	12	1	4
$D6	12	2	4
$D7	9	0	3
$D8	-	-	-
$D9	11	2	4,7
$DA	-	-	-
$DB	11	13	4,12
$DC	12	7	4
$DD	6	1	2,9
$DE	-	-	-
$DF	-	-	-

EVENT	HCRM		PAGE
$E0	13	7	5,13
$E1	16	9	6,13
$E2	13	0	5,13
$E3	13	2	5,13
$E4	16	10	6,13
$E5	10	14	4
$E6	10	8	4
$E7	4	10	2
$E8	4	11	2
$E9	-	-	-
$EA	-	-	-
$EB	10	4	4,12
$EC	8	14	3
$ED	4	12	2,11
$EE	5	4	2,11
$EF	5	13	2,11

EVENT	HCRM		PAGE
$F0	11	0	4,7
$F1	-	-	-
$F2	11	8	4,7
$F3	11	9	4,7
$F4	-	-	-
$F5	11	15	4,7
$F6	10	5	4,7
$F7	12	9	4,7
$F8	-	-	-
$F9	12	13	4,7
$FA	12	14	4,7
$FB	-	-	-
$FC	-	-	-
$FD	-	-	-
$FE	-	-	-
$FF	-	-	-

ITEM NO.	PART NO.	DESCRIPTION or SIZE	QTY. REQ.

PARTS LIST

UNLESS OTHERWISE SPECIFIED			ORIGINATOR	Mike Kuplic	8-27-99
FRACTIONS	DECIMALS	ANGLES	DRAWN	Mike Kuplic	8-27-99
+ -	+ -	+ -	LAST REVISED	Mike Kuplic	6-21-06
			APPROVED	-	-

USED ON

TEVATRON CLOCK GENERATOR

Source Reference:

FERMI NATIONAL ACCELERATOR LABORATORY

UNITED STATES DEPARTMENT OF ENERGY

TEVATRON CLOCK INTERCONNECT
TABLE OF CONTENTS

SCALE	DRAWING NUMBER	REV.
1:1	Page 0 of 15	A

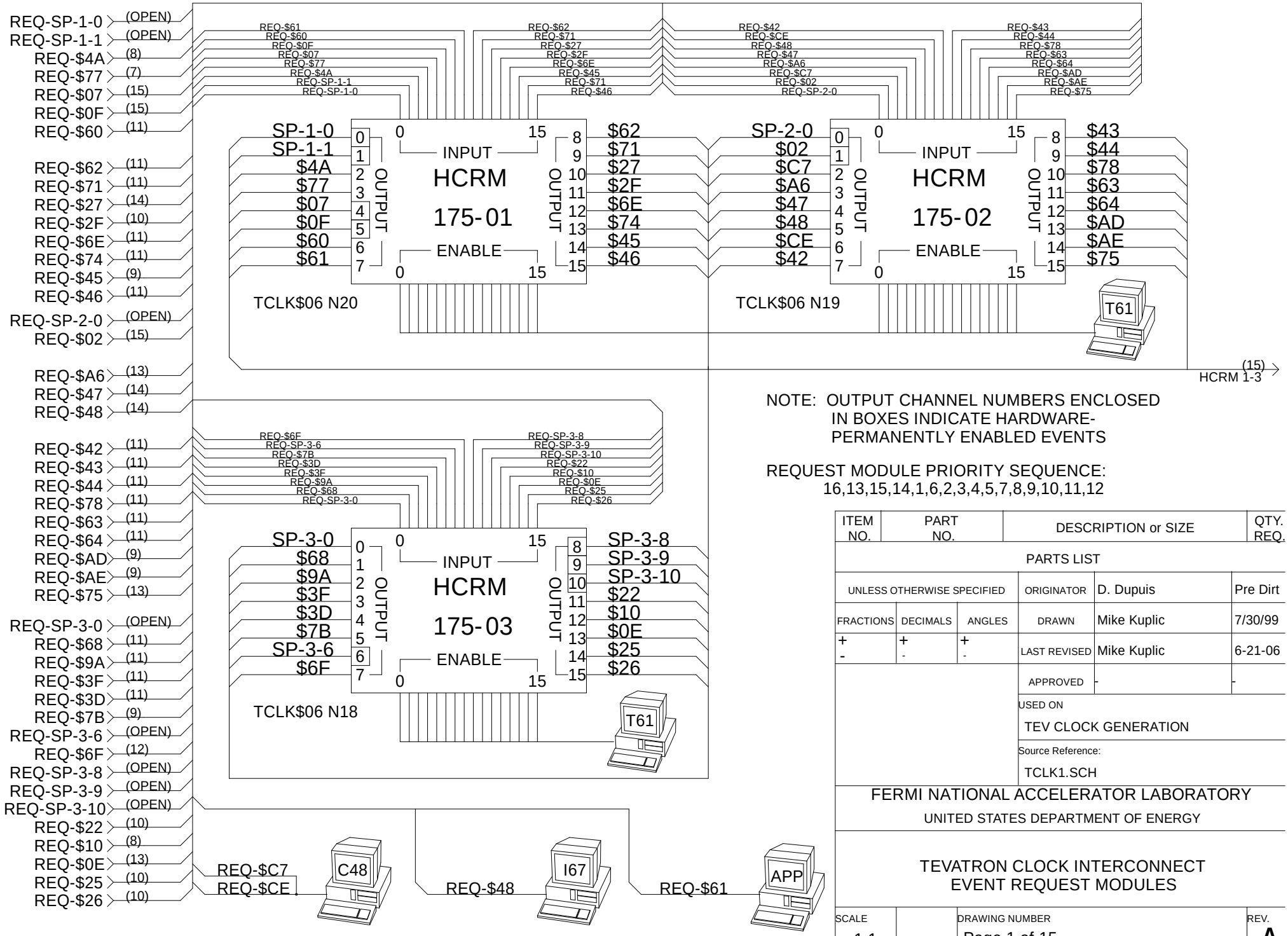

NOTE: OUTPUT CHANNEL NUMBERS ENCLOSED IN BOXES INDICATE HARDWARE-PERMANENTLY ENABLED EVENTS

REQUEST MODULE PRIORITY SEQUENCE:
16,13,15,14,1,6,2,3,4,5,7,8,9,10,11,12

ITEM NO.	PART NO.	DESCRIPTION or SIZE	QTY. REQ.
PARTS LIST			

UNLESS OTHERWISE SPECIFIED			ORIGINATOR	D. Dupuis	Pre Dirt
FRACTIONS	DECIMALS	ANGLES	DRAWN	Mike Kuplic	7/30/99
+ -	+ -	+ -	LAST REVISED	Mike Kuplic	6-21-06
			APPROVED	-	-

USED ON
TEV CLOCK GENERATION

Source Reference:
TCLK1.SCH

FERMI NATIONAL ACCELERATOR LABORATORY
UNITED STATES DEPARTMENT OF ENERGY

TEVATRON CLOCK INTERCONNECT
EVENT REQUEST MODULES

SCALE	DRAWING NUMBER	REV.
1:1	Page 1 of 15	A

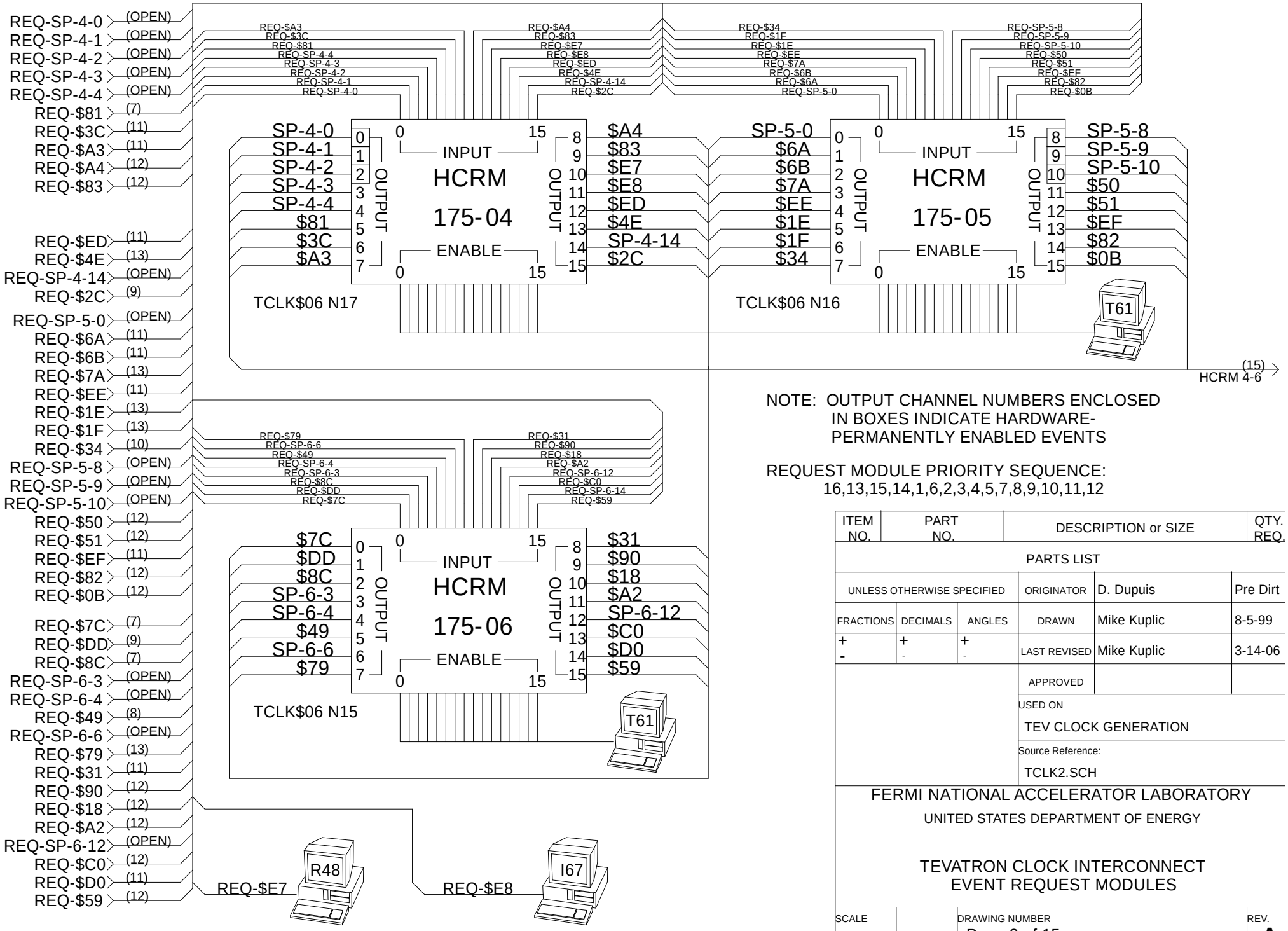

NOTE: OUTPUT CHANNEL NUMBERS ENCLOSED IN BOXES INDICATE HARDWARE-PERMANENTLY ENABLED EVENTS

REQUEST MODULE PRIORITY SEQUENCE:
16,13,15,14,1,6,2,3,4,5,7,8,9,10,11,12

ITEM NO.	PART NO.	DESCRIPTION or SIZE	QTY. REQ.
PARTS LIST			

UNLESS OTHERWISE SPECIFIED			ORIGINATOR	D. Dupuis	Pre Dirt
FRACTIONS	DECIMALS	ANGLES	DRAWN	Mike Kuplic	8-5-99
+ -	+ -	+ -	LAST REVISED	Mike Kuplic	3-14-06
			APPROVED		

USED ON
TEV CLOCK GENERATION

Source Reference:
TCLK2.SCH

FERMI NATIONAL ACCELERATOR LABORATORY
UNITED STATES DEPARTMENT OF ENERGY

TEVATRON CLOCK INTERCONNECT
EVENT REQUEST MODULES

SCALE	DRAWING NUMBER	REV.
1:1	Page 2 of 15	A

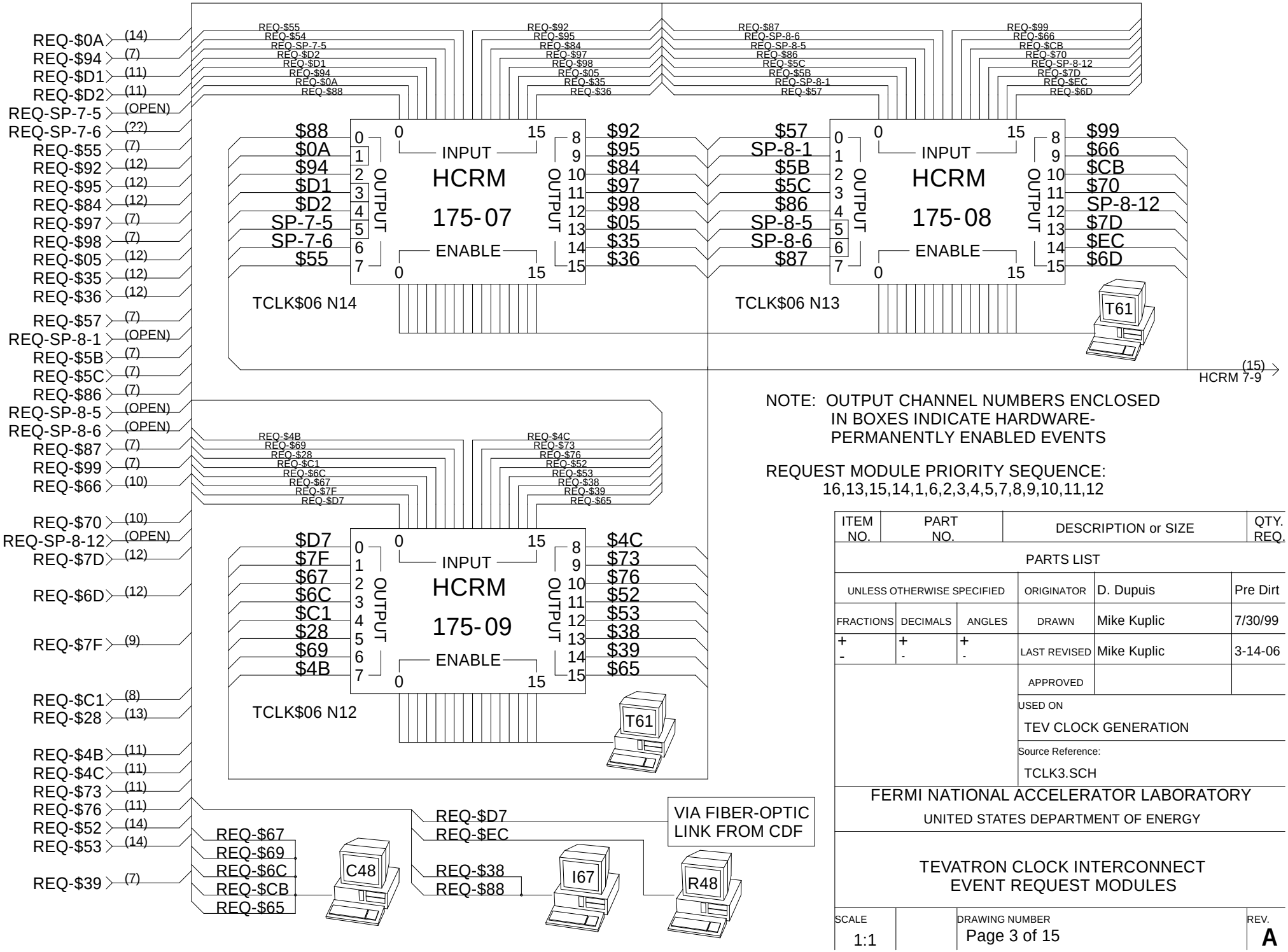

NOTE: OUTPUT CHANNEL NUMBERS ENCLOSED IN BOXES INDICATE HARDWARE-PERMANENTLY ENABLED EVENTS

REQUEST MODULE PRIORITY SEQUENCE:
16,13,15,14,1,6,2,3,4,5,7,8,9,10,11,12

ITEM NO.	PART NO.	DESCRIPTION or SIZE	QTY. REQ.
PARTS LIST			

UNLESS OTHERWISE SPECIFIED			ORIGINATOR	D. Dupuis	Pre Dirt
FRACTIONS	DECIMALS	ANGLES	DRAWN	Mike Kuplic	7/30/99
+ -	+ -	+ -	LAST REVISED	Mike Kuplic	3-14-06
			APPROVED		

USED ON
TEV CLOCK GENERATION

Source Reference:
TCLK3.SCH

FERMI NATIONAL ACCELERATOR LABORATORY
UNITED STATES DEPARTMENT OF ENERGY

TEVATRON CLOCK INTERCONNECT
EVENT REQUEST MODULES

SCALE	DRAWING NUMBER	REV.
1:1	Page 3 of 15	A

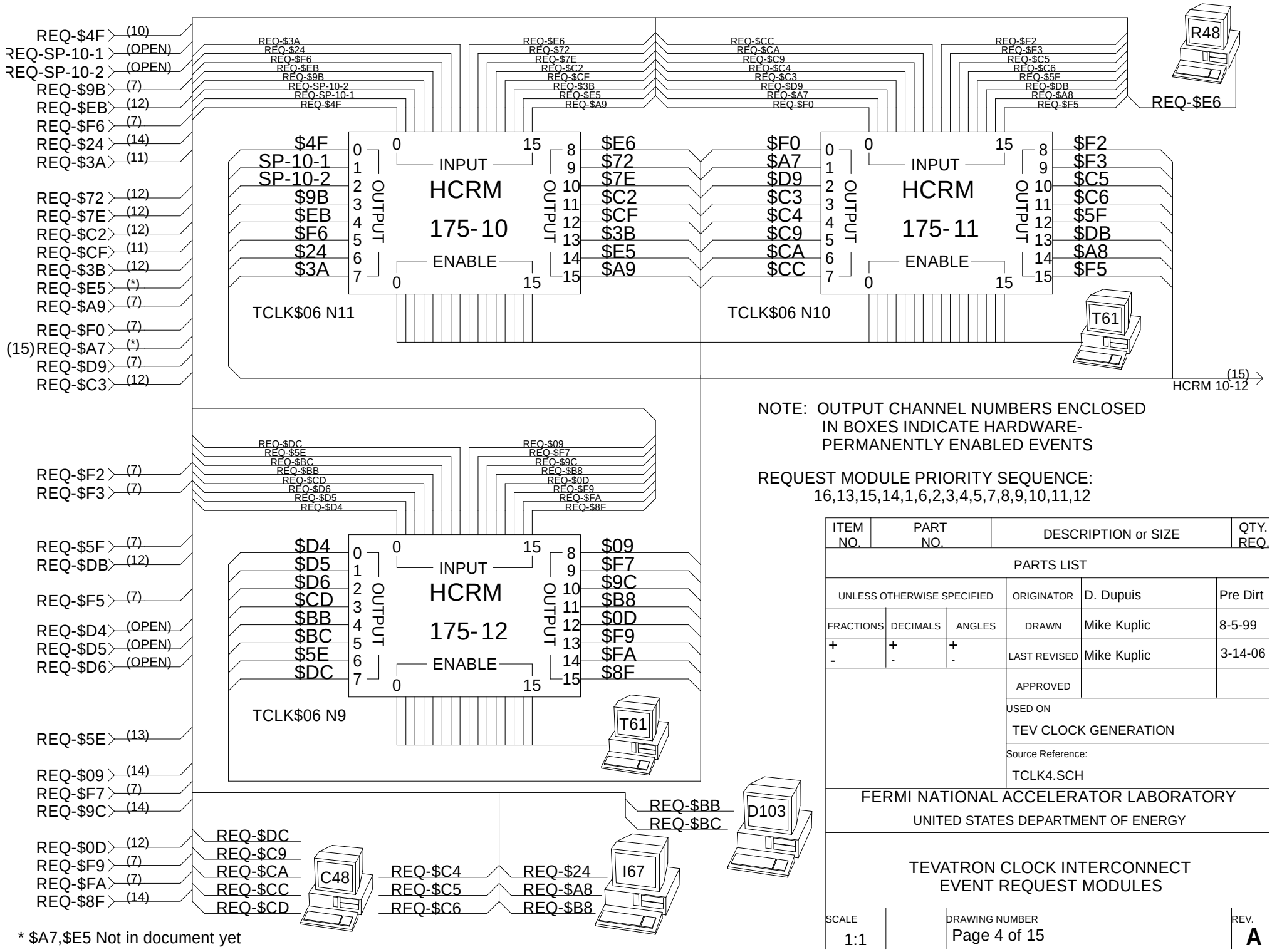

NOTE: OUTPUT CHANNEL NUMBERS ENCLOSED IN BOXES INDICATE HARDWARE-PERMANENTLY ENABLED EVENTS

REQUEST MODULE PRIORITY SEQUENCE:
16,13,15,14,1,6,2,3,4,5,7,8,9,10,11,12

ITEM NO.	PART NO.	DESCRIPTION or SIZE	QTY. REQ.
PARTS LIST			

UNLESS OTHERWISE SPECIFIED			ORIGINATOR	D. Dupuis	Pre Dirt
FRACTIONS	DECIMALS	ANGLES	DRAWN	Mike Kuplic	8-5-99
+ -	+ -	+ -	LAST REVISED	Mike Kuplic	3-14-06
			APPROVED		

USED ON
TEV CLOCK GENERATION

Source Reference:
TCLK4.SCH

FERMI NATIONAL ACCELERATOR LABORATORY
UNITED STATES DEPARTMENT OF ENERGY

TEVATRON CLOCK INTERCONNECT
EVENT REQUEST MODULES

SCALE	DRAWING NUMBER	REV.
1:1	Page 4 of 15	A

* $A7,$E5 Not in document yet

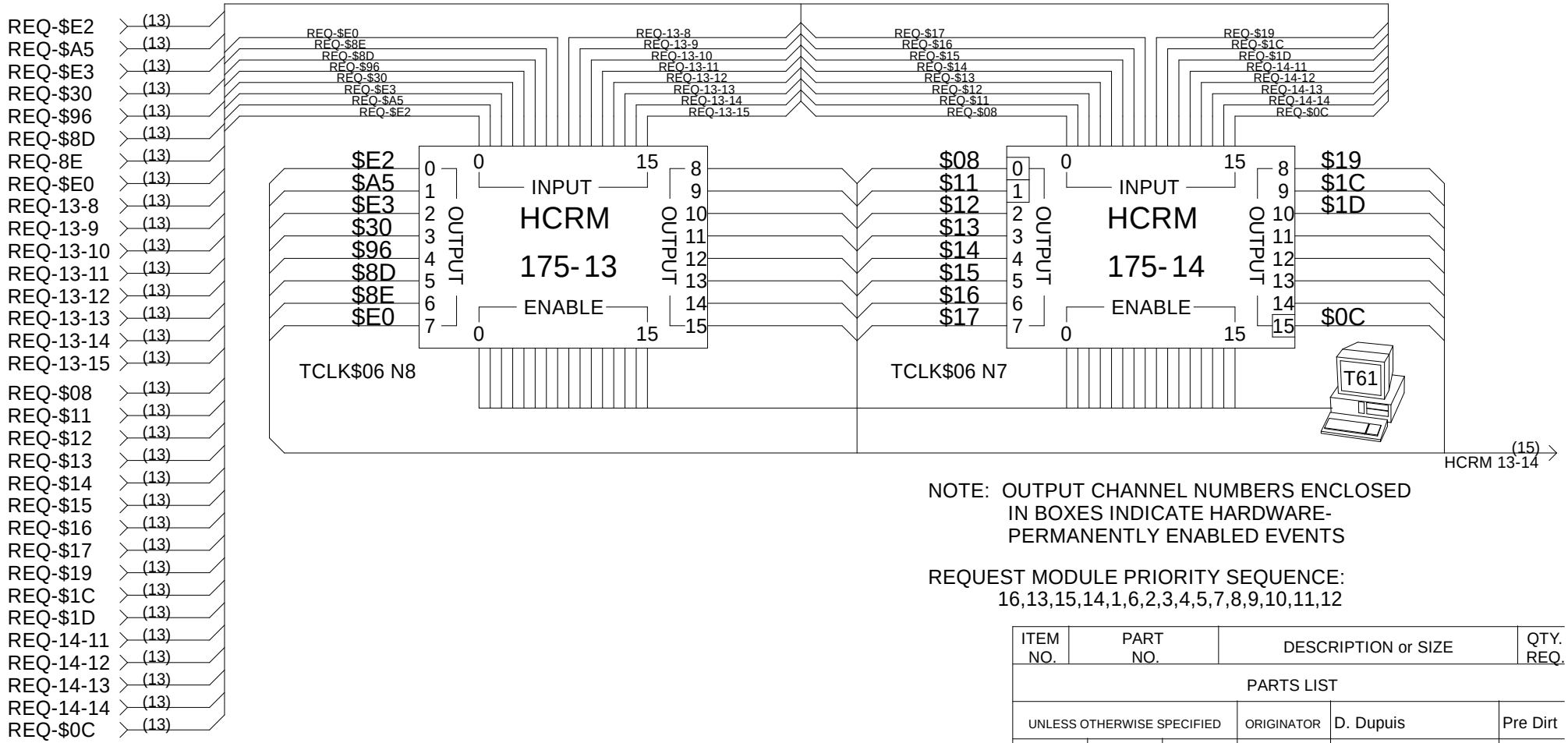

NOTE: OUTPUT CHANNEL NUMBERS ENCLOSED IN BOXES INDICATE HARDWARE-PERMANENTLY ENABLED EVENTS

REQUEST MODULE PRIORITY SEQUENCE:
16,13,15,14,1,6,2,3,4,5,7,8,9,10,11,12

ITEM NO.	PART NO.	DESCRIPTION or SIZE	QTY. REQ.
PARTS LIST			

UNLESS OTHERWISE SPECIFIED			ORIGINATOR	D. Dupuis	Pre Dirt
FRACTIONS	DECIMALS	ANGLES	DRAWN	Mike Kuplic	8-5-99
+ -	+ -	+ -	LAST REVISED	Mike Kuplic	3-15-06
			APPROVED	*	***

USED ON
TEV CLOCK GENERATION

Source Reference:
TCLK5.SCH

FERMI NATIONAL ACCELERATOR LABORATORY
UNITED STATES DEPARTMENT OF ENERGY

TEVATRON CLOCK INTERCONNECT
EVENT REQUEST MODULES

SCALE	DRAWING NUMBER	REV.
1:1	Page 5 of 15	A

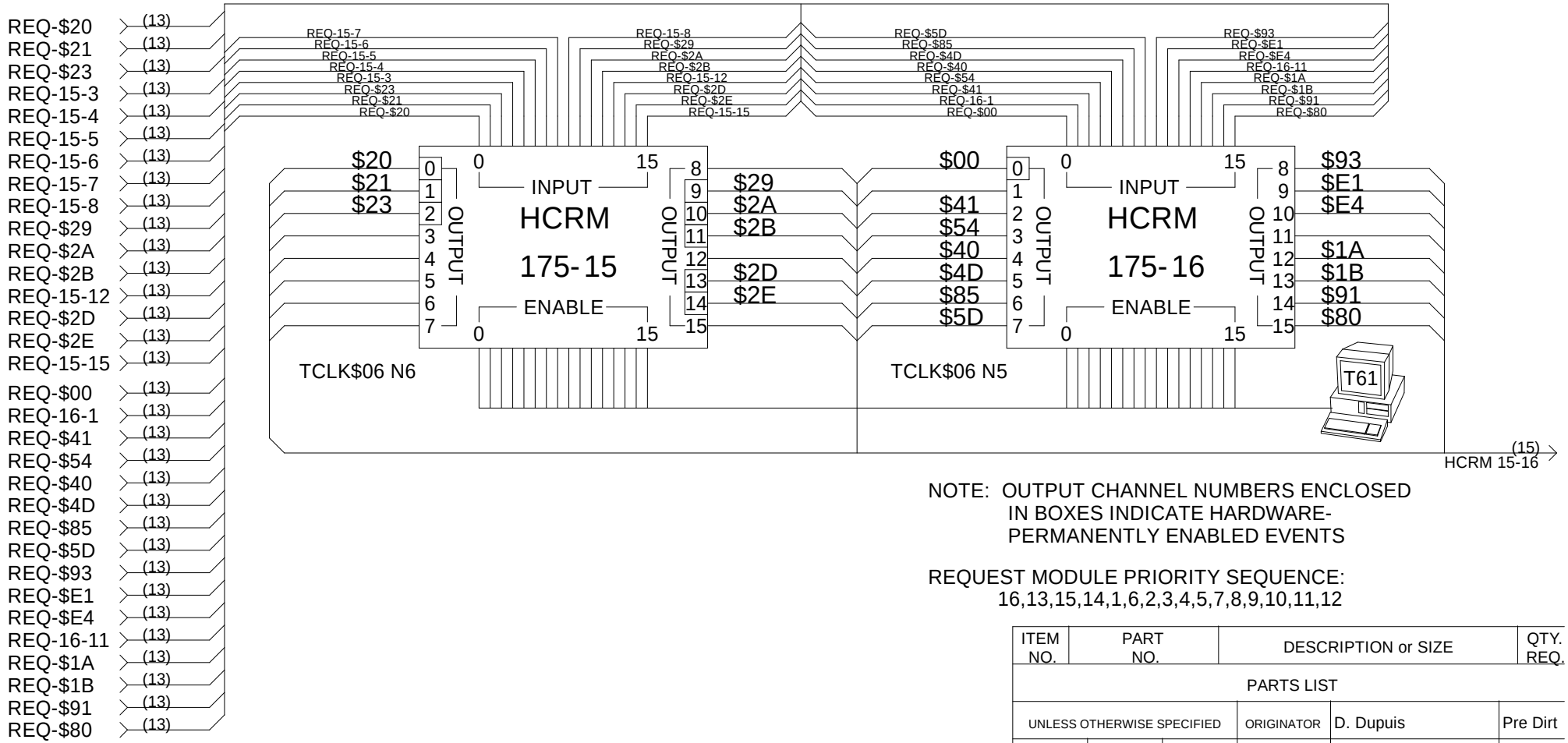

NOTE: OUTPUT CHANNEL NUMBERS ENCLOSED IN BOXES INDICATE HARDWARE-PERMANENTLY ENABLED EVENTS

REQUEST MODULE PRIORITY SEQUENCE:
16,13,15,14,1,6,2,3,4,5,7,8,9,10,11,12

ITEM NO.	PART NO.	DESCRIPTION or SIZE	QTY. REQ.
PARTS LIST			

UNLESS OTHERWISE SPECIFIED			ORIGINATOR	D. Dupuis	Pre Dirt
FRACTIONS	DECIMALS	ANGLES	DRAWN	Mike Kuplic	8-5-99
+ -	+ -	+ -	LAST REVISED	Mike Kuplic	3-15-06
			APPROVED	*	***

USED ON
TEV CLOCK GENERATION

Source Reference:
TCLK6.SCH

FERMI NATIONAL ACCELERATOR LABORATORY
UNITED STATES DEPARTMENT OF ENERGY

TEVATRON CLOCK INTERCONNECT
EVENT REQUEST MODULES

SCALE	DRAWING NUMBER	REV.
1:1	Page 6 of 15	A

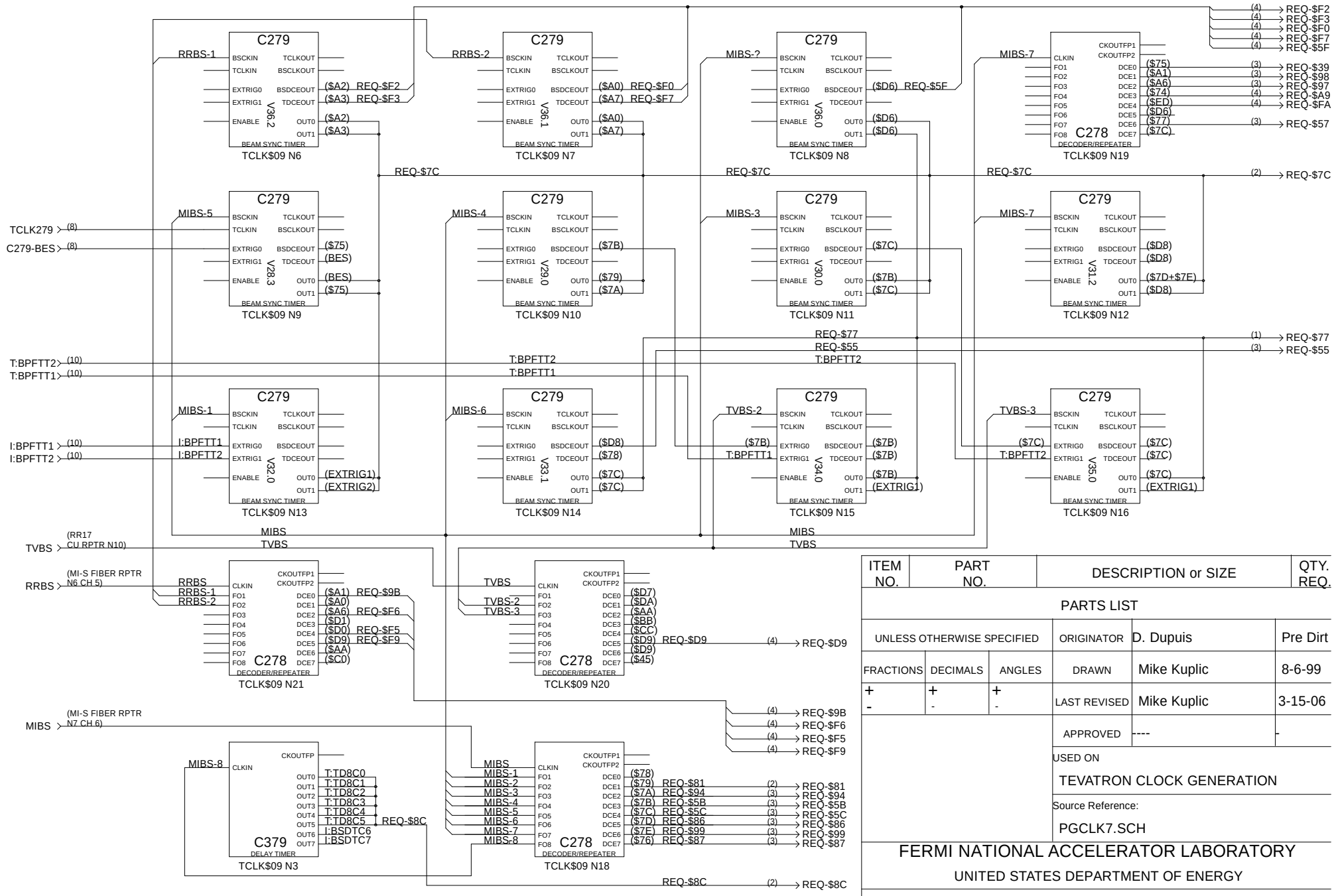

ITEM NO.	PART NO.	DESCRIPTION or SIZE	QTY. REQ.

PARTS LIST

UNLESS OTHERWISE SPECIFIED			ORIGINATOR	D. Dupuis	Pre Dirt
FRACTIONS	DECIMALS	ANGLES	DRAWN	Mike Kuplic	8-6-99
+ -	+ -	+ -	LAST REVISED	Mike Kuplic	3-15-06
			APPROVED	----	-

USED ON

TEVATRON CLOCK GENERATION

Source Reference:

PGCLK7.SCH

FERMI NATIONAL ACCELERATOR LABORATORY

UNITED STATES DEPARTMENT OF ENERGY

TEVATRON CLOCK INTERCONNECT
BEAM SYNC CLOCK DETECTION

SCALE	DRAWING NUMBER	REV.
1:1	Page 7 of 15	A

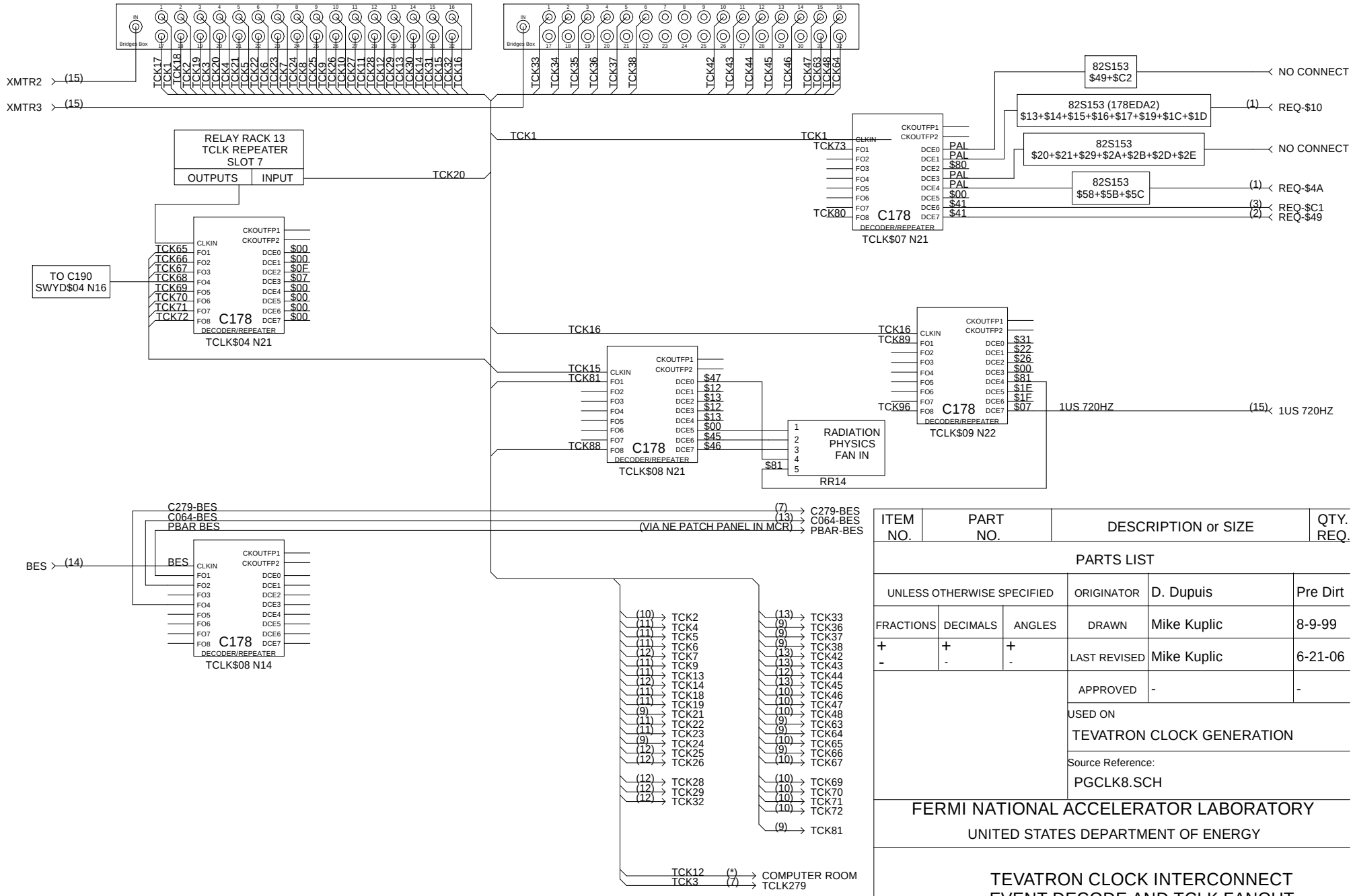

ITEM NO.	PART NO.	DESCRIPTION or SIZE	QTY. REQ.

PARTS LIST

UNLESS OTHERWISE SPECIFIED			ORIGINATOR	D. Dupuis	Pre Dirt
FRACTIONS	DECIMALS	ANGLES	DRAWN	Mike Kuplic	8-9-99
+ -	+ -	+ -	LAST REVISED	Mike Kuplic	6-21-06
			APPROVED	-	-

USED ON
TEVATRON CLOCK GENERATION

Source Reference:
PGCLK8.SCH

FERMI NATIONAL ACCELERATOR LABORATORY
UNITED STATES DEPARTMENT OF ENERGY

TEVATRON CLOCK INTERCONNECT
EVENT DECODE AND TCLK FANOUT

SCALE	DRAWING NUMBER	REV.
1:1	Page 8 of 15	A

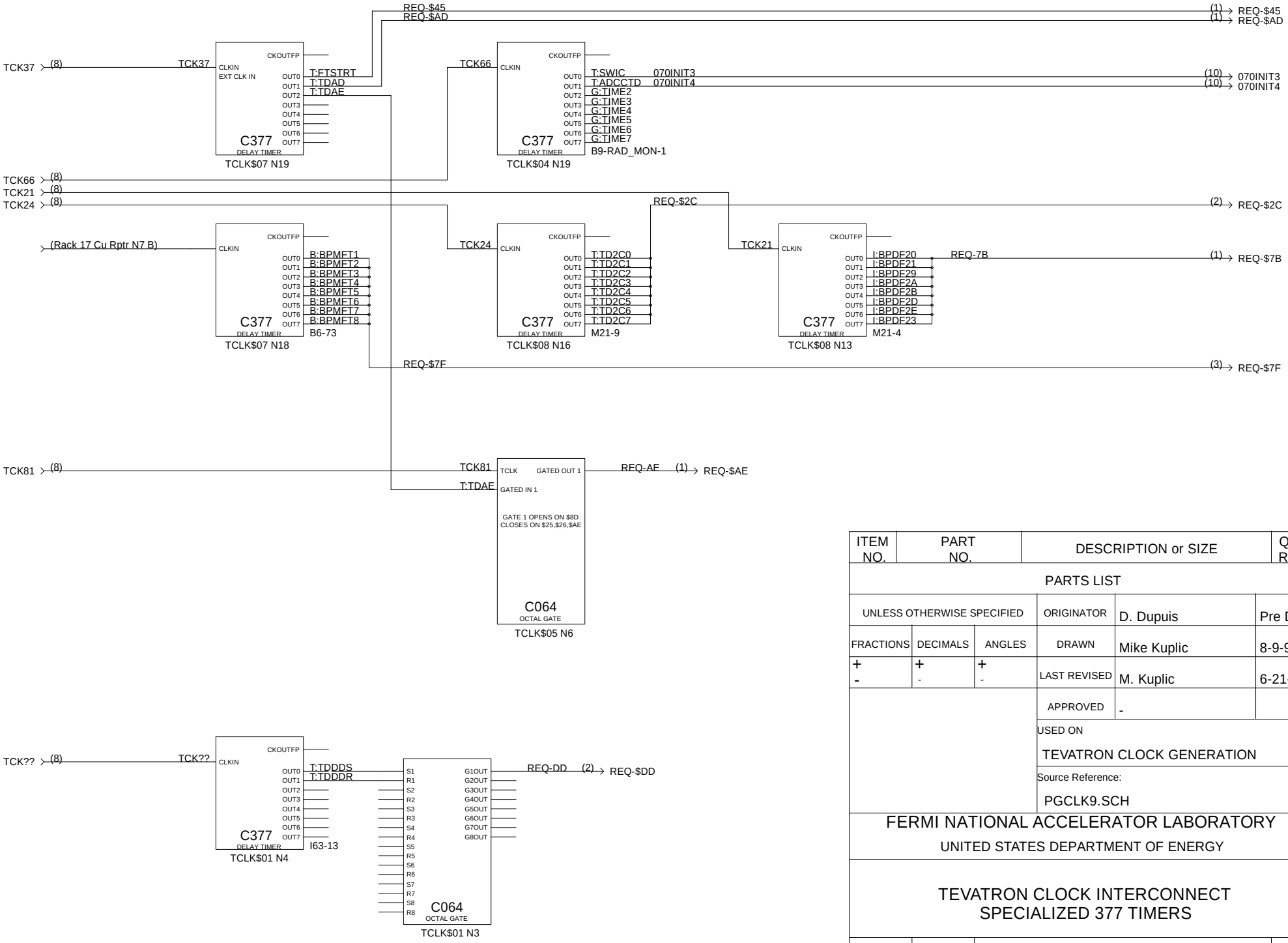

ITEM NO.	PART NO.	DESCRIPTION or SIZE	QTY. REQ.

PARTS LIST

UNLESS OTHERWISE SPECIFIED			ORIGINATOR	D. Dupuis	Pre Dirt
FRACTIONS	DECIMALS	ANGLES	DRAWN	Mike Kuplic	8-9-99
+ -	+ -	+ -	LAST REVISED	M. Kuplic	6-21-06
			APPROVED	-	

USED ON

TEVATRON CLOCK GENERATION

Source Reference:

PGCLK9.SCH

FERMI NATIONAL ACCELERATOR LABORATORY

UNITED STATES DEPARTMENT OF ENERGY

TEVATRON CLOCK INTERCONNECT
SPECIALIZED 377 TIMERS

SCALE	DRAWING NUMBER	REV.
1:1	Page 9 of 15	A

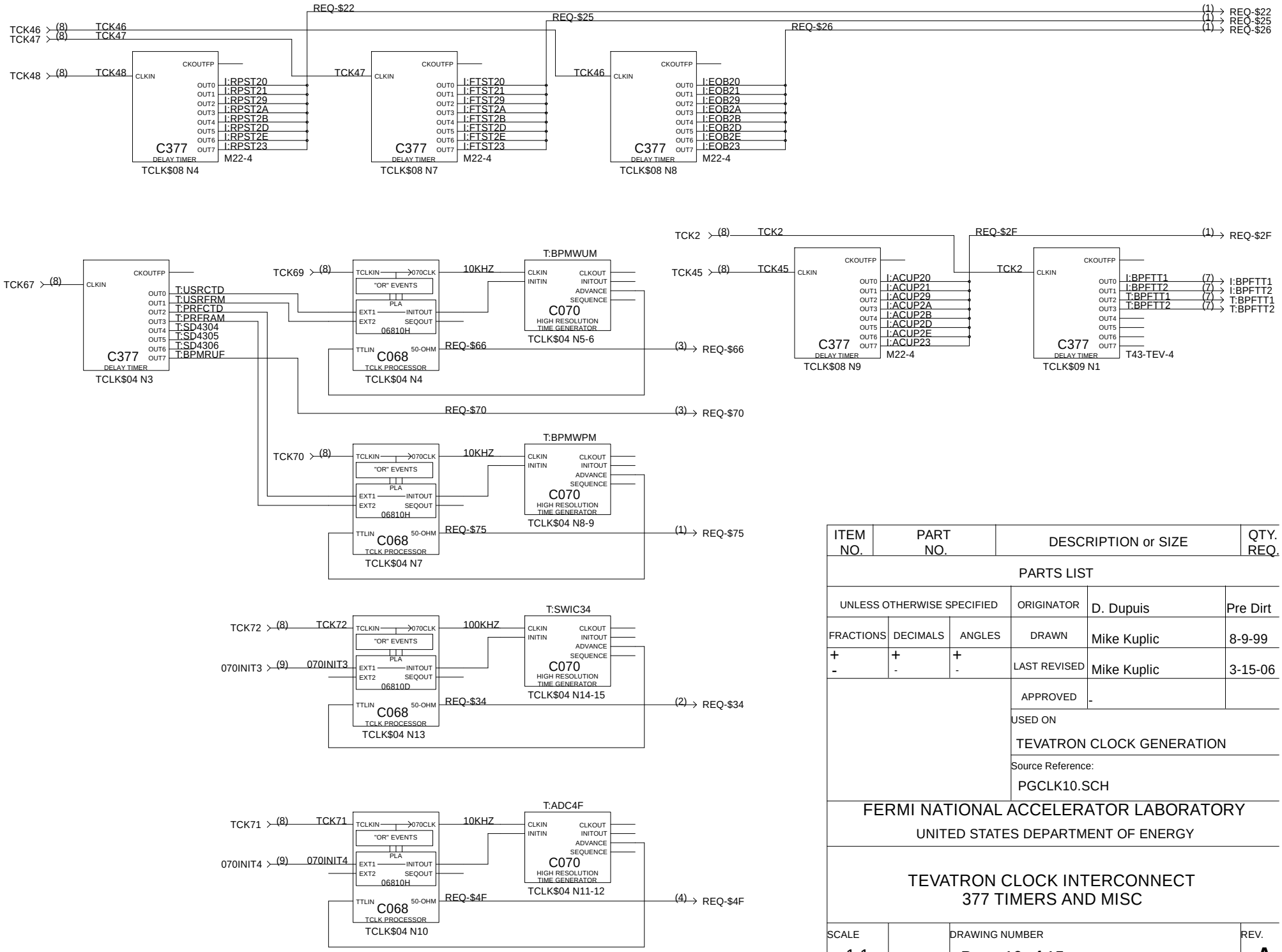

ITEM NO.	PART NO.	DESCRIPTION or SIZE	QTY. REQ.

PARTS LIST

UNLESS OTHERWISE SPECIFIED			ORIGINATOR	D. Dupuis	Pre Dirt
FRACTIONS	DECIMALS	ANGLES	DRAWN	Mike Kuplic	8-9-99
+ -	+ -	+ -	LAST REVISED	Mike Kuplic	3-15-06
			APPROVED	-	

USED ON

TEVATRON CLOCK GENERATION

Source Reference:

PGCLK10.SCH

FERMI NATIONAL ACCELERATOR LABORATORY

UNITED STATES DEPARTMENT OF ENERGY

TEVATRON CLOCK INTERCONNECT
377 TIMERS AND MISC

SCALE	DRAWING NUMBER	REV.
1:1	Page 10 of 15	A

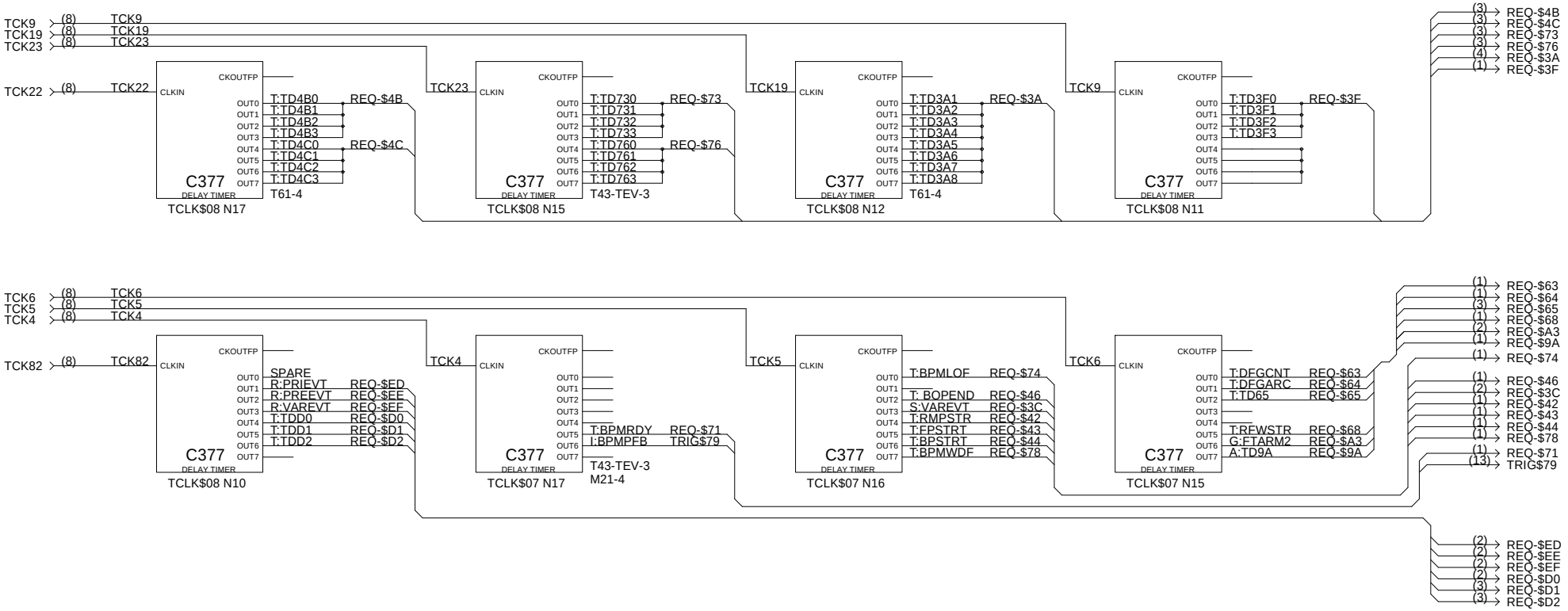

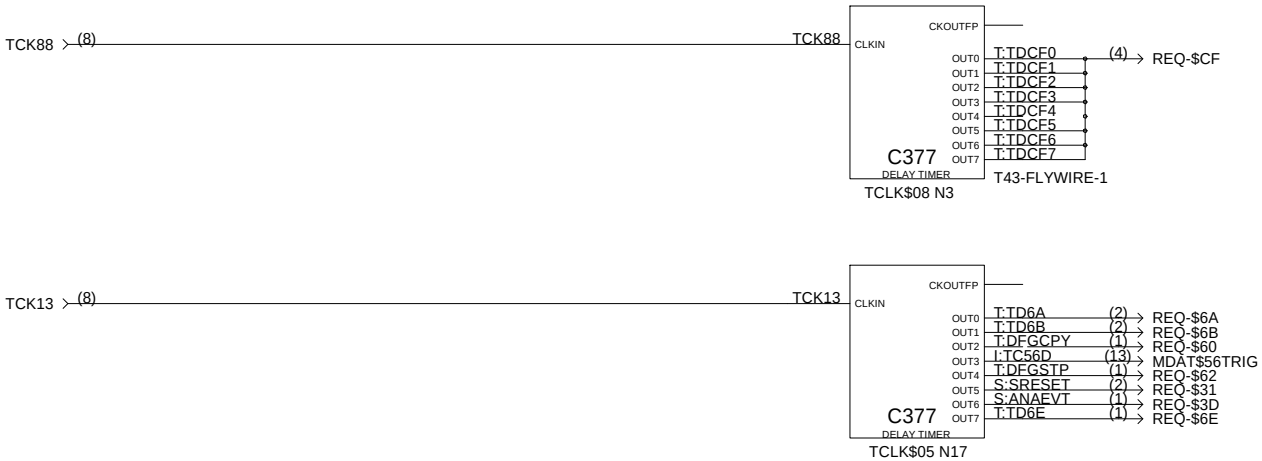

ITEM NO.	PART NO.	DESCRIPTION or SIZE	QTY. REQ.

PARTS LIST

UNLESS OTHERWISE SPECIFIED			ORIGINATOR	D. Dupuis	Pre Dirt
FRACTIONS	DECIMALS	ANGLES	DRAWN	Mike Kuplic	8-9-99
+ -	+ -	+ -	LAST REVISED	Mike Kuplic	10-12-04
			APPROVED	-	

USED ON

TEVATRON CLOCK GENERATION

Source Reference:

PGCLK11.SCH

FERMI NATIONAL ACCELERATOR LABORATORY

UNITED STATES DEPARTMENT OF ENERGY

TEVATRON CLOCK INTERCONNECT SPECIALIZED AND STANDARD 377 TIMERS

SCALE	DRAWING NUMBER	REV.
1:1	Page 11 of 15	A

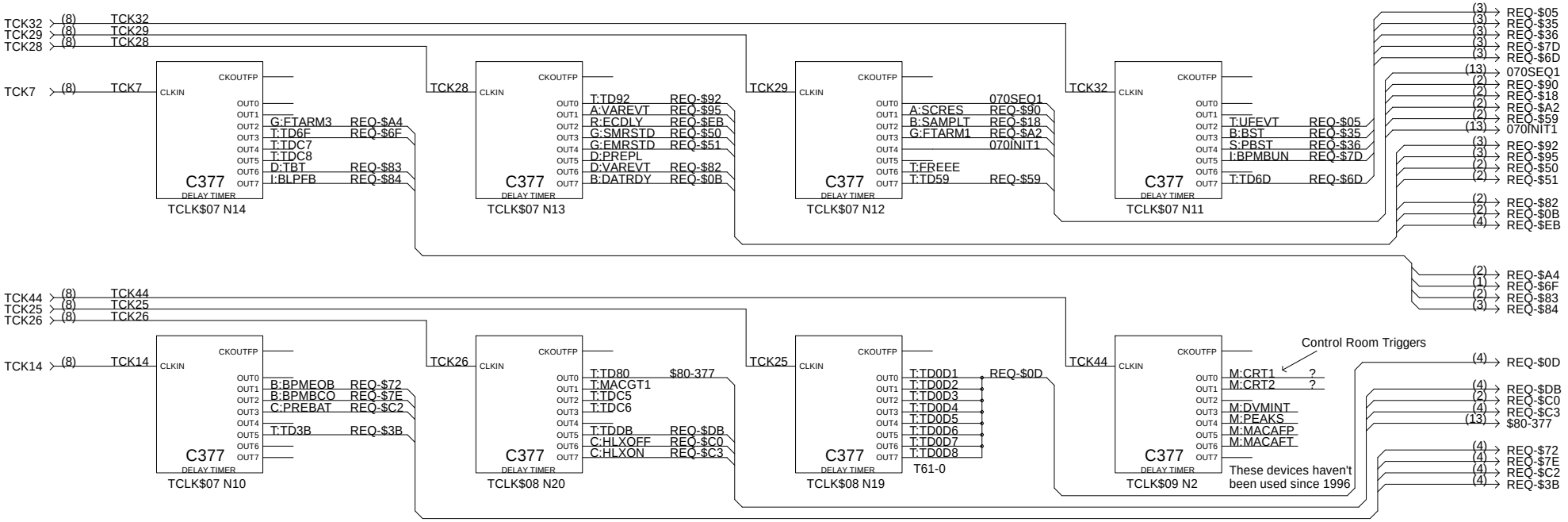

ITEM NO.	PART NO.	DESCRIPTION or SIZE	QTY. REQ.

PARTS LIST

UNLESS OTHERWISE SPECIFIED			ORIGINATOR	D. Dupuis	Pre Dirt
FRACTIONS	DECIMALS	ANGLES	DRAWN	Mike Kuplic	8-9-99
+ -	+ -	+ -	LAST REVISED	Mike Kuplic	3-15-06
			APPROVED	-	

USED ON

TEVATRON CLOCK GENERATION

Source Reference:

PGCLK12.SCH

FERMI NATIONAL ACCELERATOR LABORATORY

UNITED STATES DEPARTMENT OF ENERGY

TEVATRON CLOCK INTERCONNECT
STANDARD 377 TIMERS

SCALE	DRAWING NUMBER	REV.
1:1	Page 12 of 15	A

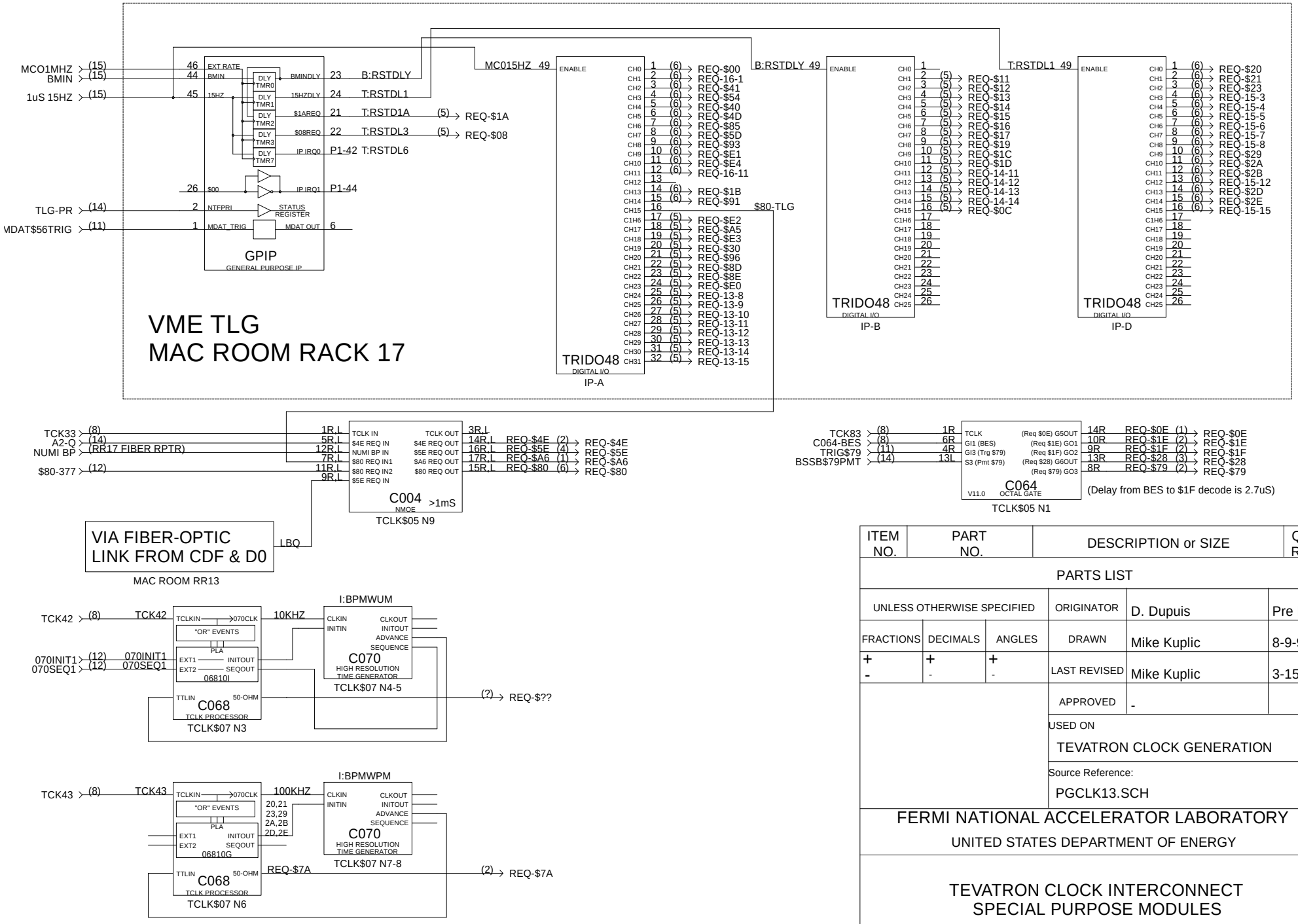

ITEM NO.	PART NO.	DESCRIPTION or SIZE	QTY. REQ.

PARTS LIST

UNLESS OTHERWISE SPECIFIED			ORIGINATOR	D. Dupuis	Pre Dirt
FRACTIONS	DECIMALS	ANGLES	DRAWN	Mike Kuplic	8-9-99
+ -	+ -	+ -	LAST REVISED	Mike Kuplic	3-15-06
			APPROVED	-	

USED ON

TEVATRON CLOCK GENERATION

Source Reference:

PGCLK13.SCH

FERMI NATIONAL ACCELERATOR LABORATORY

UNITED STATES DEPARTMENT OF ENERGY

TEVATRON CLOCK INTERCONNECT
SPECIAL PURPOSE MODULES

SCALE	DRAWING NUMBER	REV.
1:1	Page 13 of 15	A

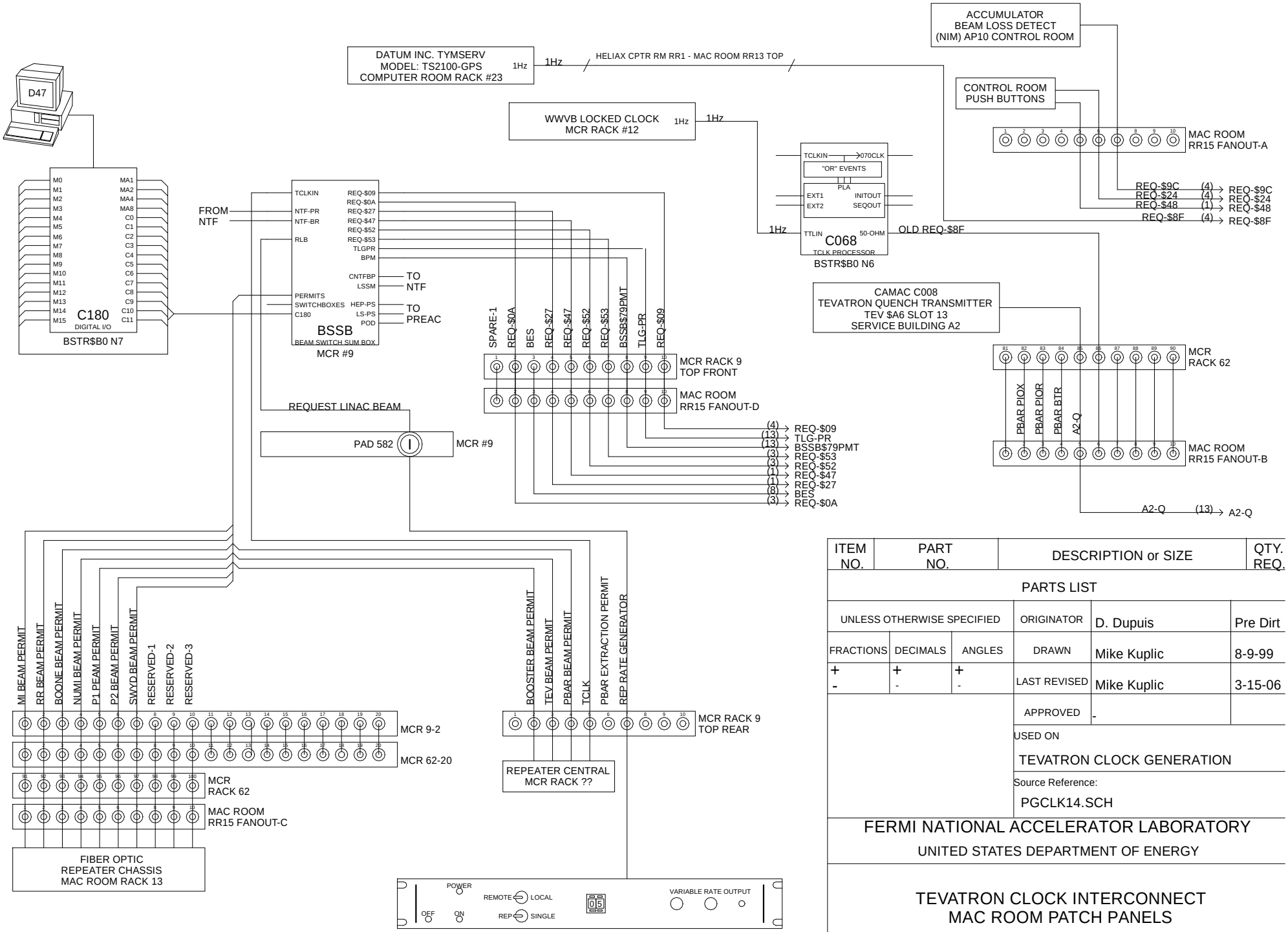

ITEM NO.	PART NO.	DESCRIPTION or SIZE	QTY. REQ.

PARTS LIST

UNLESS OTHERWISE SPECIFIED			ORIGINATOR	D. Dupuis	Pre Dirt
FRACTIONS	DECIMALS	ANGLES	DRAWN	Mike Kuplic	8-9-99
+ -	+ -	+ -	LAST REVISED	Mike Kuplic	3-15-06
			APPROVED	-	

USED ON

TEVATRON CLOCK GENERATION

Source Reference:

PGCLK14.SCH

FERMI NATIONAL ACCELERATOR LABORATORY

UNITED STATES DEPARTMENT OF ENERGY

TEVATRON CLOCK INTERCONNECT
MAC ROOM PATCH PANELS

SCALE	DRAWING NUMBER	REV.
1:1	Page 14 of 15	A

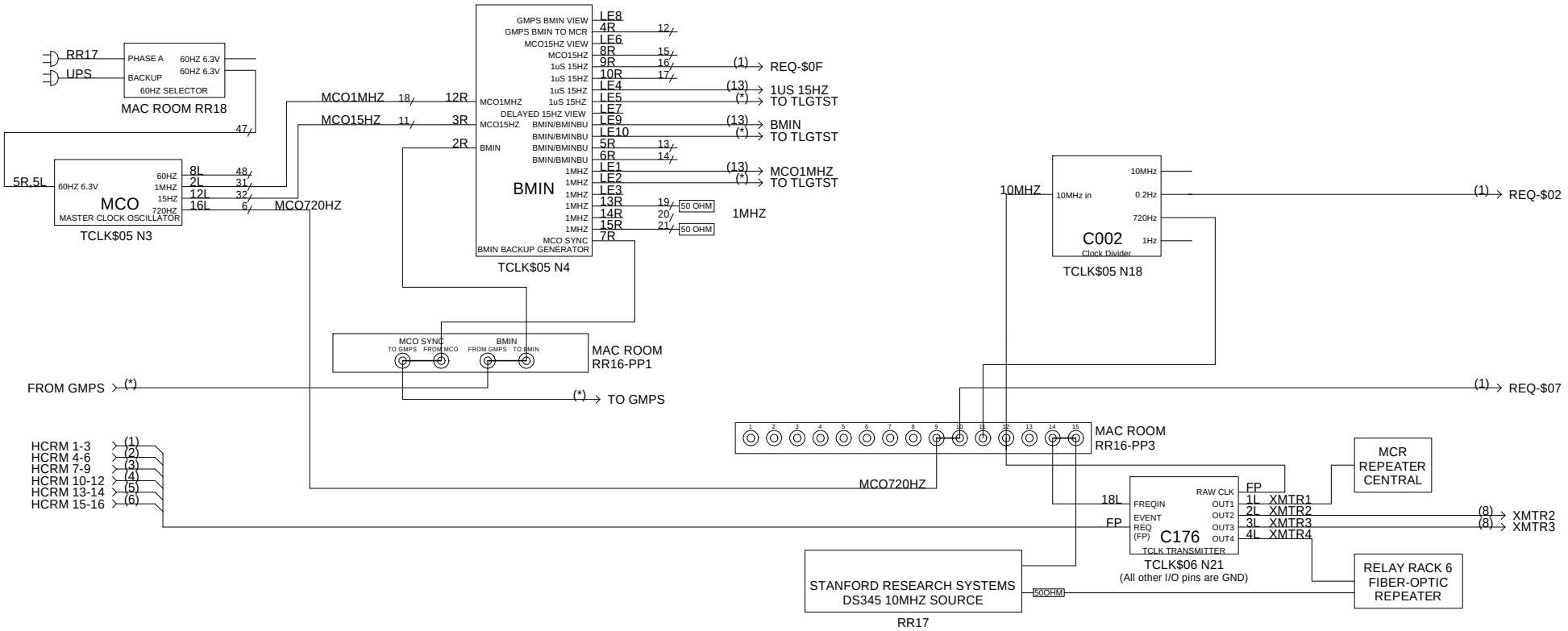

ITEM NO.	PART NO.	DESCRIPTION or SIZE	QTY. REQ.
PARTS LIST			

UNLESS OTHERWISE SPECIFIED			ORIGINATOR		
FRACTIONS	DECIMALS	ANGLES	DRAWN	Mike Kuplic	8-9-99
+ -	+ -	+ -	LAST REVISED	Mike Kuplic	3-15-06
			APPROVED	-	

USED ON

TEVATRON CLOCK GENERATION

Source Reference:

FERMI NATIONAL ACCELERATOR LABORATORY

UNITED STATES DEPARTMENT OF ENERGY

TEVATRON CLOCK INTERCONNECT FREQUENCY GENERATION

SCALE	DRAWING NUMBER	REV.
1:1	Page 15 of 15	A