REVISIONS				
SYM	DESCRIPTION	DRAWN	DATE	
		APPD.	DATE	

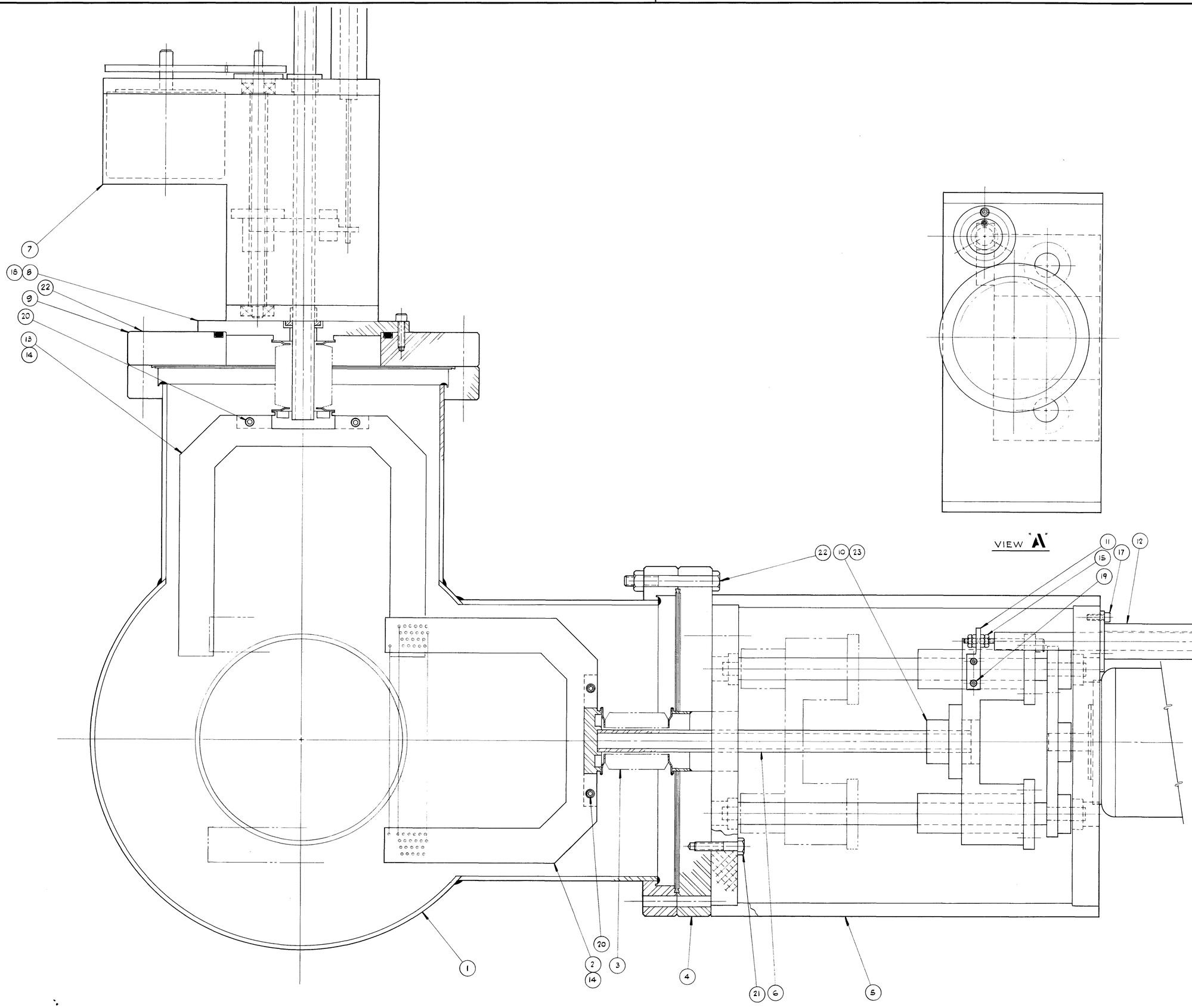

23		CAPSCREW - SOC. HD. 1/4-20	4
		UNC x 7/8 LG. S.S.	
22		BOLT - HEX. HD. 1/4-20	48
		UNC x 2 1/2 LG. S.S.	
21		CAPSCREW - HEX. HD. 1/4-20	4
		UNC x 1 1/4 LG. S.S.	
20		CAPSCREW - SOC. HD. #6-32	4
		UNC x 3/8 LG. S.S.	
19		CAPSCREW - SOC. HD. #6-32	2
		UNC x 3/4 LG. S.S.	
18		CAPSCREW - SOC. HD. #10-32	6
		UNF x 3/4" LG. S.S.	
17		CAPSCREW - SOC. HD. #8-32	3
		UNC x 1/2" LG. S.S.	
16		CAPSCREW - SOC. HD. #4-40	3
		UNC x 1/2" LG. S.S.	
15		NUT - #6-32	4
14	MC-36354	WIRE FRAME SUPPORT	2
13	MC-36353	BPR-WIRE FRAME	1
12	MB-36329	LINEAR POT. SUPPORT	1
11	MB-36330	LINEAR POT. ARM	1
10	MB-36328	SHAFT SUPPORT	1
9	MC-36350	BPR MOUNTING FLANGE	1
8	0314-MC-2942	BPR - WIRE TYPE - FLANGE	1
7	0314-ME-2942	BPR - WIRE TYPE	1
6	MC-36325	FLANGED SHAFT	1
5	0213-MD-3644	PROBE DRIVE ASSEMBLY	1
4	MC-36326	EXTERIOR FLANGE	1
3		WELDED BELLOWS - 1.63 O.D. x	1
		.75 I.D. 5" STROKE, 6 7/8 COMP.	
		LGTH. S.S. AVICA CO. # 60040-10	
2	MC-36352	WIRE FRAME	1
1	MD-36351	VACUUM CAN	1
ITEM NO.	PART NO.	DESCRIPTION	QTY. REQ.

PARTS LIST

UNLESS OTHERWISE SPECIFIED			ORIGINATOR	G. LEE	
FRACTIONS	DECIMALS	ANGLES	DRAWN	R. C. SMITH	9-11-73
±	±	±	CHECKED		
			APPROVED		
			APPROVED		

1. BREAK ALL SHARP EDGES 1/64 MAX.
2. DO NOT SCALE DWG.
3. DIMENSIONING IN ACCORD WITH USASI Y14.5 STD'S.

√ MAX. ALL MACHINED SURFACES

USED ON 0315-ME-36364

MATERIAL-

NATIONAL ACCELERATOR LABORATORY
U.S. ATOMIC ENERGY COMMISSION

BOOSTER SYNCHROTRON
200 MEV VACUUM SYSTEM
MOMENTUM TARGET

SCALE	FILMED	DRAWING NUMBER	REV.
FULL	E	0315-ME-36355	

BRUNING 40-107—