REV	DESCRIPTION	DRAWN / APPROVED	DATE / DATE
A	ADD MCMASTER-CARR PART NO'S; AS BUILT	R.GLOOR	10/03
B	REM. ITEM # 38 (DUP OF # 35); ITEM 41 WAS MB-374338	R.GLOOR	01/04
C	IMPORT DXF INTO AUTOCAD, CORRECTED DRAWING TO CURRENT DESIGN	L.PURCELL-TAYLOR	07/06
D	UPDATED DRAWING TO MATCH CHANGES MADE ON AUTOCAD TO THIS DWG NO. AND TO REFLECT LATEST REV. ADDED ALIGNMENT NOTE	J.MICHALIC	12-FEB-2008
		R.REILLY	29-OCT-2009

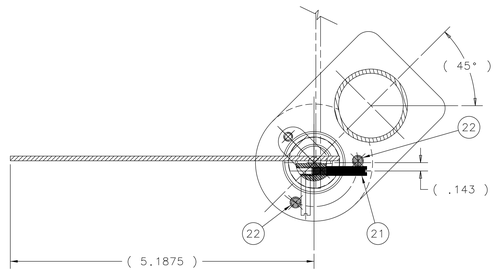

SECTION A-A
FULL SCALE

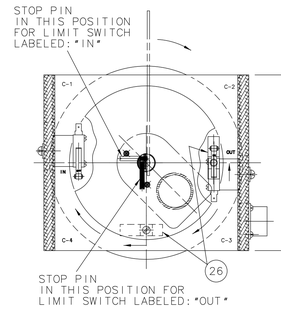

SECTION C-C

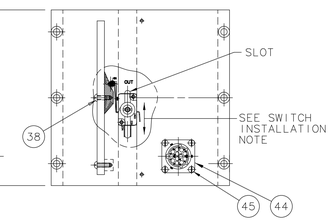

SIDE VIEW OF C-C

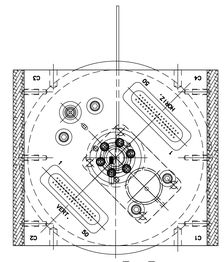

SECTION B-B

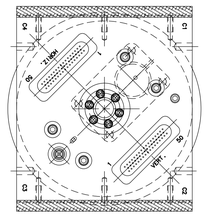

SECTION D-D

LONG SCREWS ARE TO BE IN LOCATIONS INDICATED.
IF SCREWS IN MOTOR ARE SUPPLIED IN DIFFERENT LOCATIONS RELOCATE SO THAT THE LONG SCREWS EXTEND THROUGH THE TWO TOP PLATE HOLES FOR MOTOR MOUNTING ASSEMBLY TO TOP PLATE.
NOTE: TIMING OF SHAFT, BECAUSE IT IS NOT CENTERED ON MOTOR.

SWITCH INSTALLATION:

1. ROTATE MULTIWIRE PLANE SHAFT TO STOP AS INDICATED IN VIEW C-C.
2. ASSEMBLE SWITCH TO SPACER BLOCK.
3. INSERT SWITCH/BLOCK ASSEMBLY INTO SLIDE PLATE GROOVE.
4. INSERT SCREW THRU LOCK WASHER AND FLAT WASHER AND THEN INTO THE SPACER BLOCK - SNUG UP BUT DO NOT TIGHTEN.
5. SLIDE SWITCH TO POSITION WHERE LIMIT SWITCH ARM JUST ACTIVATES, THEN TIGHTEN SCREW.

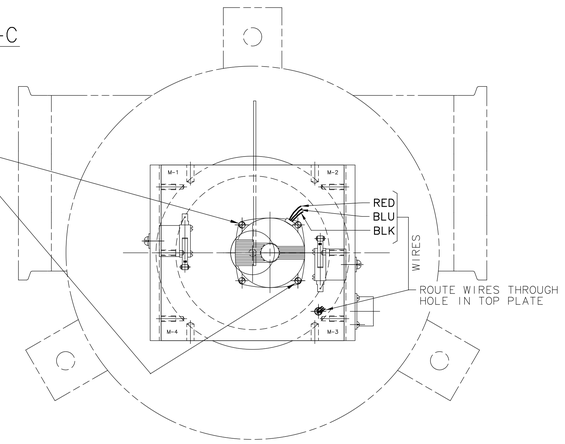

NOTE:
THIS ASSEMBLY IS DESIGNED TO BE USED WITH VACUUM BOX 9502.000-MC-359915

△D SEE DRAWING MD-463313 FOR ALIGNMENT OF WIRE PLANE

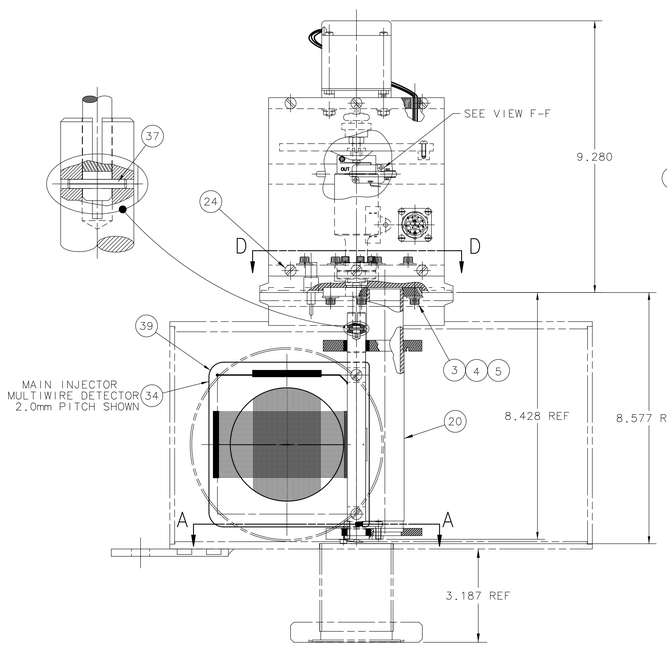

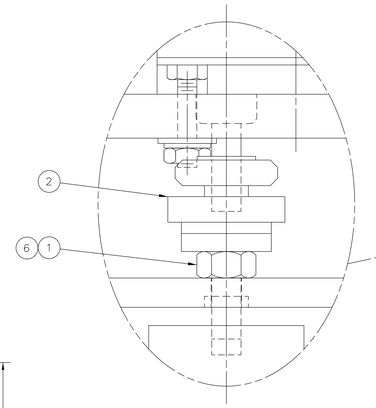

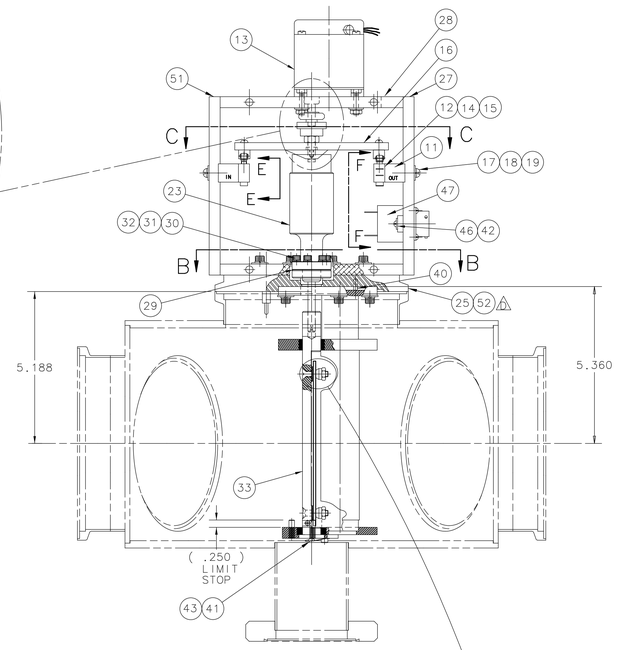

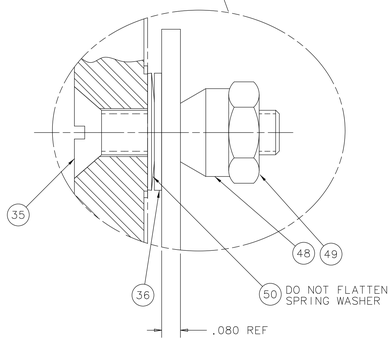

ENLARGED VIEW
SCALE: 4:1

INFORMATION / PART NUMBERS FOR:
- MAIN INJECTOR MULTIWIRE DETECTORS
&
- NUMI LOW LOSS MULTIWIRE DETECTORS

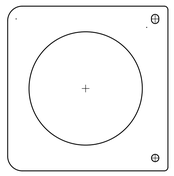

BLANK CERAMIC FRAME FOR MAIN INJECTOR
PART No. 9508.000-MC-463180

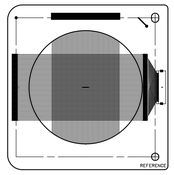

USED FOR: MAIN INJECTOR

LOW LOSS MULTIWIRE DETECTOR

1.0mm PITCH SHOWN ABOVE

SUPPLIED IN THREE PITCHES USING
THE FOLLOWING WIRE SIZES & MATERIALS
FOR EACH SPECIFIC WIRE PITCH LISTED:

PITCH	WIRE SIZE	MAT'L	PART No.
0.5mm	25um	Ti	9508.000-MC-463181
1.0mm	25-75um	AuW	9508.000-MC-463182
2.0mm	50um	BeCu	9508.000-MC-463183

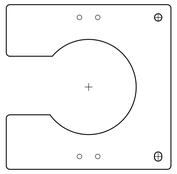

BLANK CERAMIC FRAME FOR NUMI
PART No. 8875.115-MC-422737

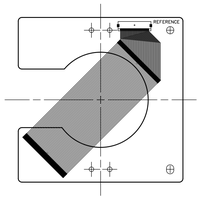

USED FOR: NUMI

LOW LOSS MULTIWIRE DETECTOR

1.0mm PITCH SHOWN ABOVE

SUPPLIED IN SEVERAL PITCHES USING
THE FOLLOWING WIRE SIZE & MATERIAL
FOR EACH SPECIFIC WIRE PITCH LISTED:

PITCH	WIRE SIZE	MAT'L	PART No.
0.5mm	25um	Ti	9508.000-MC-374885
1.0mm	25um	Ti	8875.115-MC-422737

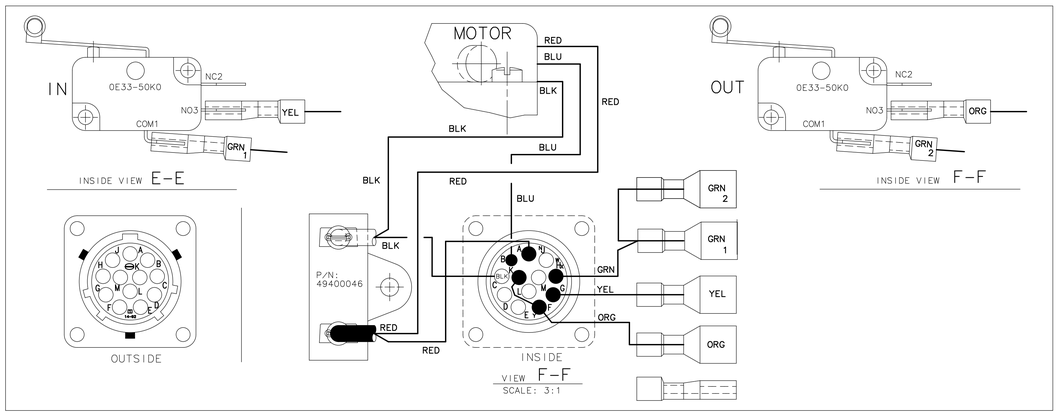

ITEM	PART NO.	DESCRIPTION OR SIZE	QTY.
△A 52	S-34-0042.01	EVAC 6" KNIFE SEAL	1
51	9508-000-MC-374883	LIMIT SWITCH ONLY SIDE PLATE	1
50	MCMASTER-CARR P/N 9713K58	BELLEVILLE SPRING WASHER SPEC CATALOG NO. B-0375-015-S S'STL	2
49		#10-24 HEX NUT S'STL	2
48	9508-000-MB-374486	WIREPLANE FASTENER LOCATOR CONE S'STL	2
47		CAPACITOR,MOTOR RUN,1MFD, 250VAC	1
46		#4 AMERICAN STD. PLAIN WASHER S'STL	2
45		#4-40 UNC AMERICAN STD.BINDER HD CAP SCREW X 3/8 LG S'STL	4
44	GOB-14-92PNE	BURNDY CONNECTOR	1
43		#6-32-UNC X 3/8 LG HEX SOCKET HD SET SCREW S'STL	1
42		#4-40 HEX HD CAP SCREW 1/2 LG.	1
41	9508-000-MB-374543	SPRING CLIP SPRING STL	1
40		ROLLPIN 1/8 DIA X 1/4 LG. S'STL	1
39	9508-000-MC-374885	CERAMIC WIRE FRAME (NUMI)	1
38		#6-32-UNC X 7/16 LG RD HD SLOTED SCREW S'STL	2
37		ROLLPIN .078 DIA X 1/2 LG. S'STL	1
36	MCMASTER-CARR P/N 90107A011	#10 AMERICAN STD.TYPE B PLAIN WASHER .406 O.D. X .203 I.D. .040 THK S'STL	2
35	9508-000-MB-374485	WIREPLANE FASTENER SHAFT S.STL #10-24UNC X 7/8 LG	2
34	9508-000-MC-463183	CERAMIC WIRE FRAME (MAIN INJECTOR)	1
33	9508-000-MB-374481	5/8 DIA.SHAFT S.STL	1
32	MCMASTER CARR PN 90945A725	#8 AMERICAN STD. SPECIAL FLAT ST S'STL (MFG PART# AM11)	6
31		#8 AMERICAN NAT'L STD.HELICAL SPRING LOCK WASHER S'STL	6
30		#8-32 UNC X 1/2 LG AMERICAN STD.HEX SOCKET HD MACH.SCREW S.STL	6
29		COPPER GASKET VARIAN P/N 9545137	1
28	9508-000-MC-374379	MOTOR MOUNTING PLATE AL 6061-T651	1
27	9508-000-MC-374273	BURNDY SIDE PLATE AL 6061-T651	1
26	9508-000-MB-374483	LIMIT SWITCH ACTUATOR S'STL	2
25	9508-000-MC-374302	VACUUM FLANGE/BOTTOM MOUNTING PLATE ASSEMBLY S.STL	1
24		#10-24 UNC AMERICAN STD. FLAT HD. MACH. SCREW X 3/4 LG S'STL	12
23	9508-000-MB-374270	MODIFIED ROTARY VACUUM FEEDTHRU S.STL	1
22	9508-000-MB-374512	LIMIT PIN S.STL	2
21	9508-000-MB-463179	MULTIWIRE BEAM PROFILE MONITOR PIN STOP	1
20	9508-000-MC-374484	WIRE FRAME SHAFT SUPPORT WELDING S.STL	1
19		#8 AMERICAN STD. PLAIN WASHER S'STL	2
18		#8 AMERICAN NAT'L STD.HELICAL SPRING LOCK WASHER S'STL	2
17		#8-32 UNC AMERICAN STD.HEX SKT. HD CAP SCREW X 3/4 LG S'STL	2
16	9508-000-MC-374487	SWITCH ACTUATOR DISK AL	1
15		#4 AMERICAN STD. PLAIN WASHER S'STL	4
14		#4 AMERICAN NAT'L STD.HELICAL SPRING LOCK WASHER S'STL	4
13	KCI-23T4 (0722)	BODINE, GEARMOTOR, AC INDUCTION PSC, 13 RPM, 1/450 HP	1
12	CHERRY P/N 0E33-50K0	LIMIT SWITCH	2
11	9508-000-MB-374378	SPACER BLOCK AL	2
10		#8-32 UNC AMERICAN STD.HEX FLAT JAM NUT S'STL	2
9		#8 AMERICAN STD. PLAIN WASHER S'STL	2
8		#8 AMERICAN NAT'L STD.HELICAL SPRING LOCK WASHER S'STL	2
7		#8-32 UNC AMERICAN STD.ROUND HD CAP SCREW X 2 3/4 LG S'STL	2
6	9508-000-MB-374482	VACUUM FEEDTHRU EXTENSION S'STL	1
5		#10 AMERICAN STD. PLAIN WASHER S'STL	4
4		#10 AMERICAN NAT'L STD.HELICAL SPRING LOCK WASHER S'STL	4
3	MCMASTER-CARR P/N 93235A242	#10-32 UNC AMERICAN STD.SOCKET HD CAP SCREW X 1/2 LG VENTED S'STL	4
2		CLUTCH CUSTOM PRODUCTS PFS16-4, 1 LB-INCH	1
1		1/4-20 UNC AMERICAN STD.HEX NUT S'STL	1

PARTS LIST

UNLESS OTHERWISE SPECIFIED			ORIGINATOR	G.TASSOTTO	01-JUL-2003
FRACTIONS	DECIMALS	ANGLES	DRAWN	B.GLOOR	24-JUL-2003
± 1/16	± .015	± 1°	CHECKED	D.SCHOO	23-JUL-2003
1. BREAK ALL SHARP EDGES .015 MAX MAX. 2. DO NOT SCALE DRAWING. 3. DIMENSIONS BASED UPON ASME Y14.5M-1994 4. MAX. ALL MACH. SURFACES 125 5. DRAWING UNITS:U.S.INCH			APPROVED	G.TASSOTTO	23-JUL-2003
			USED ON		
			MATERIAL SEE PARTS LIST		

FERMI NATIONAL ACCELERATOR LABORATORY
UNITED STATES DEPARTMENT OF ENERGY

MAIN INJECTOR MULTIWIRE BEAM PROFILE MONITOR ASSEMBLY

SCALE	DRAWING NUMBER	SHEET	REV
HALF	9508.000-ME-374488	1 OF 1	D

CREATED WITH : Ideas12NXSeries GROUP: ACCELERATOR MECH. SUPPT.

NOTICE: IMAGE OBTAINED FROM FERMILAB WEB SITE
This information is provided for REFERENCE use only. Not for MANUFACTURE, or DESIGN INFORMATION. All information contained in this document represents work sponsored by an agency of the U.S. Government. Neither the U.S. Government nor any agency thereof, nor Universities Research Association, Inc., nor any of their employees or officers, makes any warranty, express or implied, or assumes any legal liability or responsibility for the accuracy, completeness, or usefulness of any information, apparatus, product or process disclosed, or represents that its use would not infringe privately owned rights.