PEARSON™ CURRENT MONITOR MODEL 8583

Sensitivity	1 Volt/Ampere ±0.5%
Maximum peak current	500 Amperes
Maximum rms current	5 Amperes
Droop rate	0.04 %/microsecond
Useable rise time	20 nanoseconds
Current time product	0.04 Ampere-second max.
Output connector	Type N
Operating temperature	0 to 65 °C

© 2010 Pearson Electronics, Inc. 8583.wpd 100419

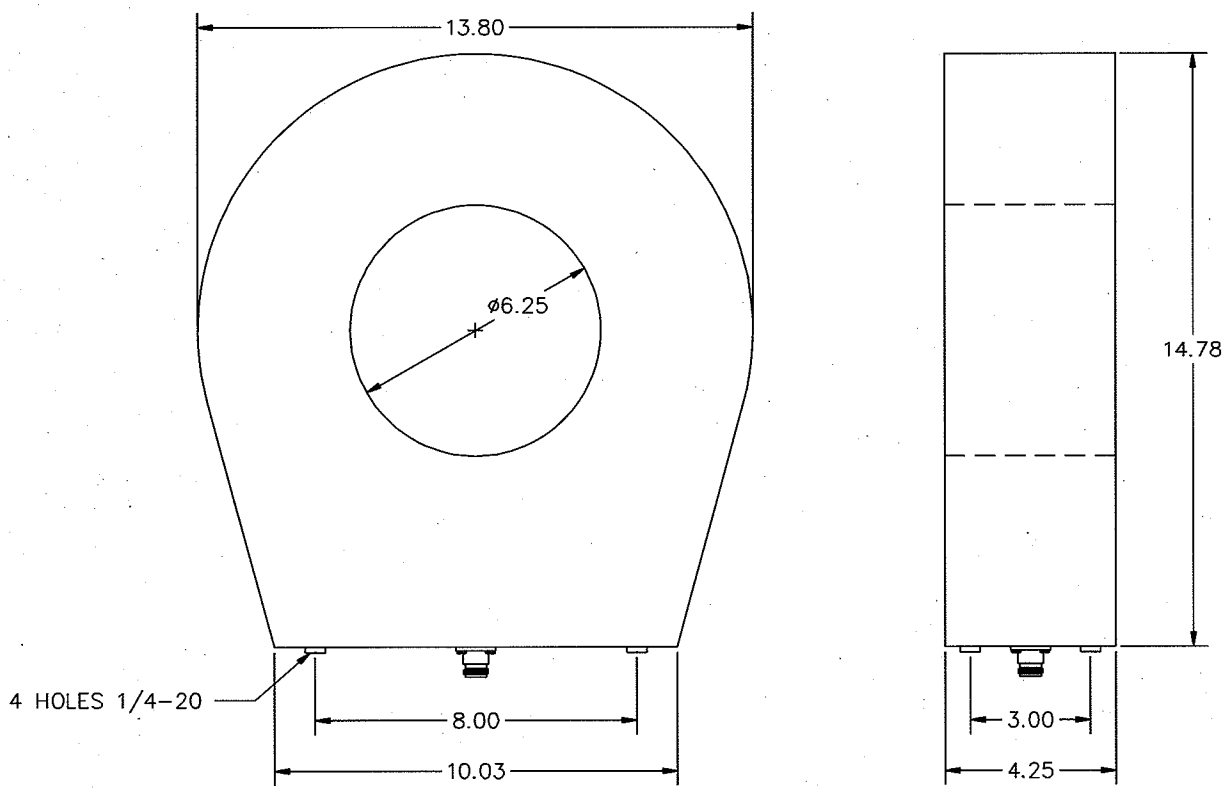

Pearson Electronics, Inc. • 4009 Transport Street • Palo Alto, CA 94303
Telephone 650-494-6444 • FAX 650-494-6716 • www.pearsonelectronics.com