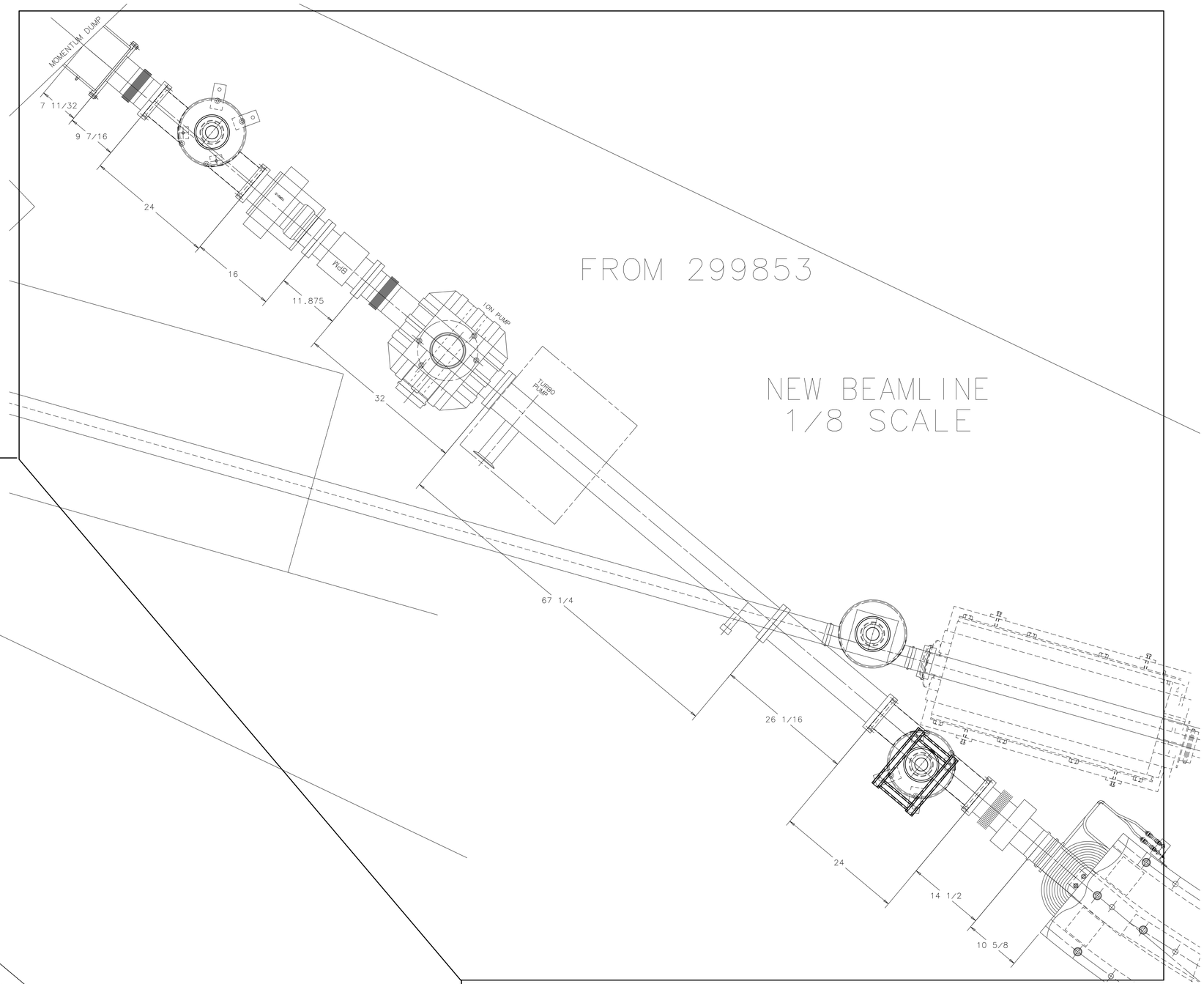
MOMENTUM DUMP
7 11/32
9 7/16
24
16
11.875
BPM
ION PUMP
TURBO PUMP
32
67 1/4
26 1/16
24
14 1/2
10 5/8
FROM 299853
NEW BEAMLINE
1/8 SCALE

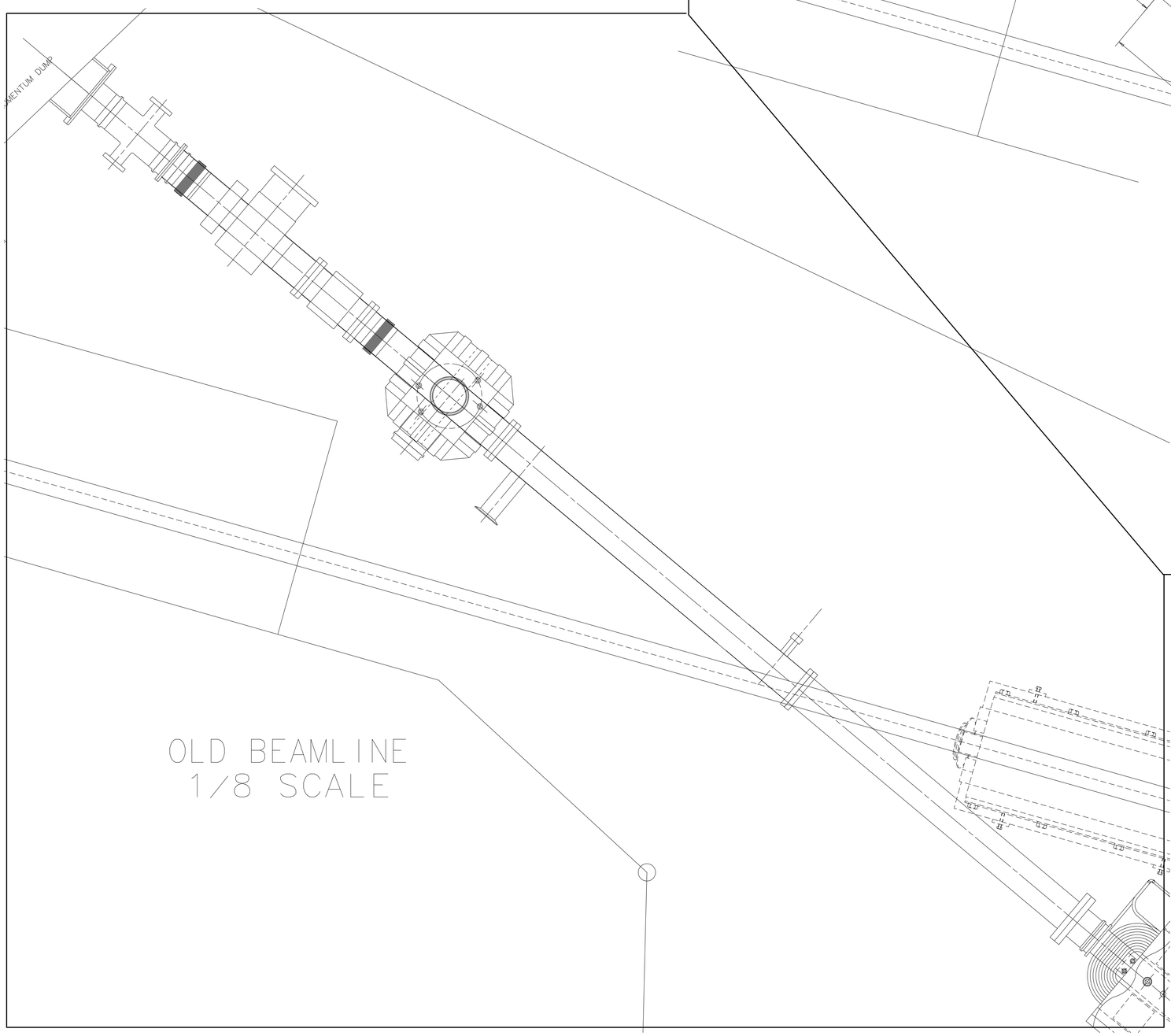
MOMENTUM DUMP
OLD BEAMLINE
1/8 SCALE

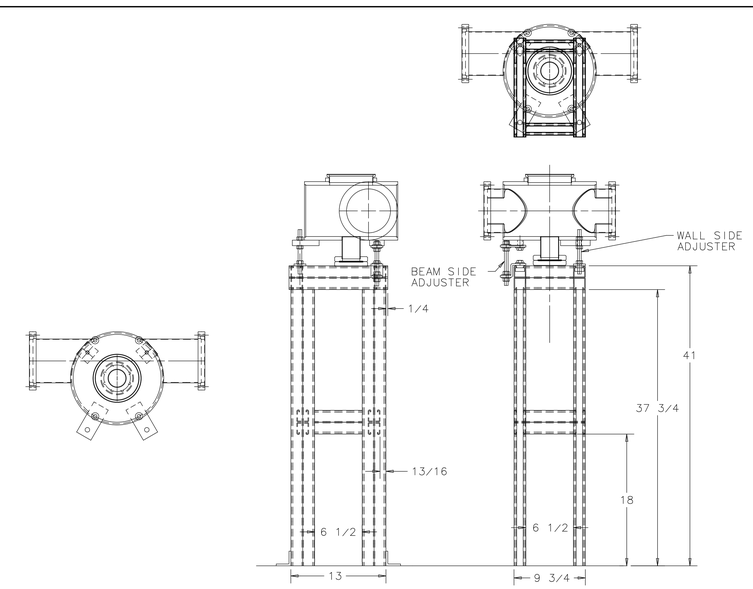
WALL SIDE ADJUSTER
BEAM SIDE ADJUSTER
1/4
41
37 3/4
13/16
18
6 1/2
6 1/2
13
9 3/4