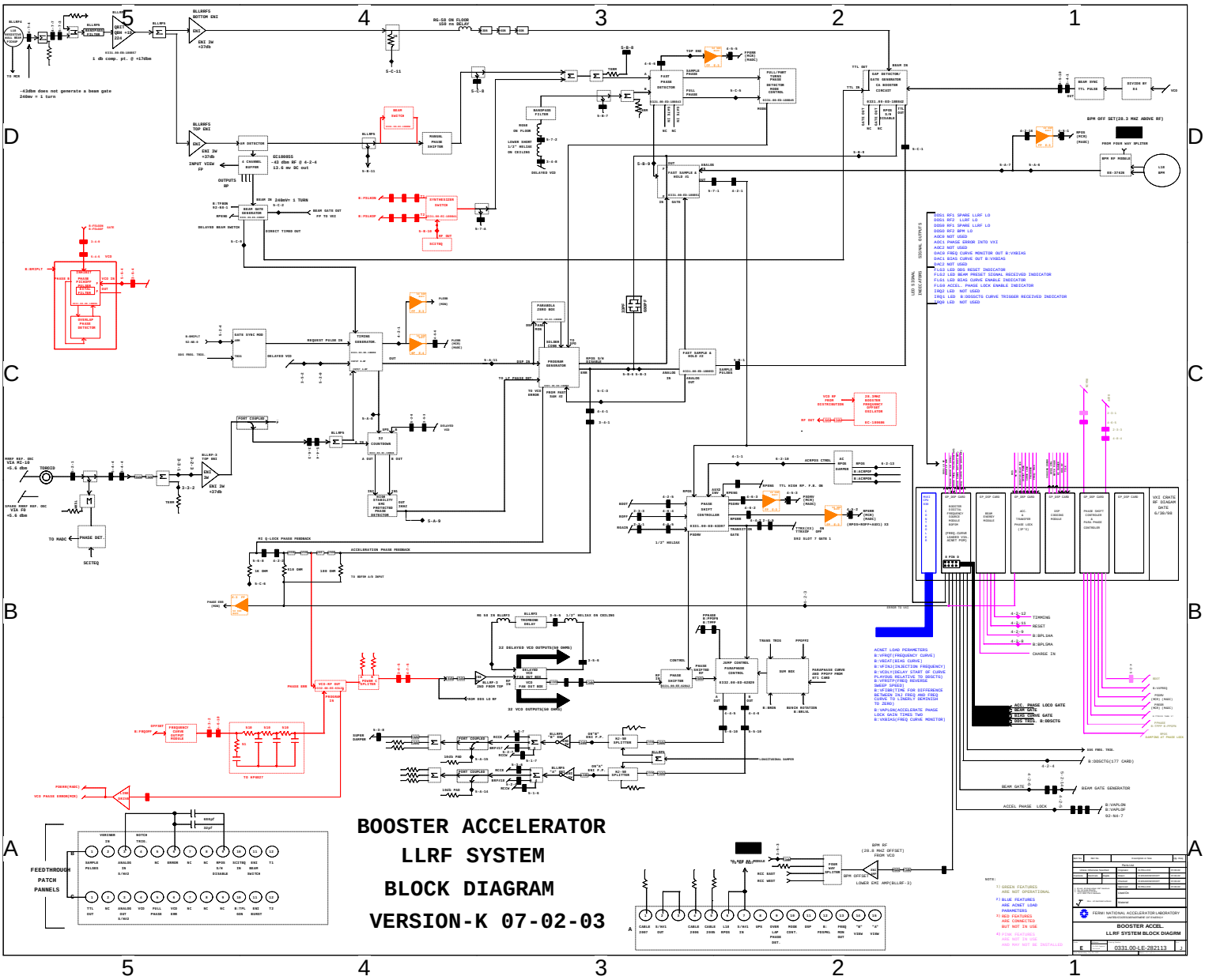
BOOSTER ACCELERATOR
LLRF SYSTEM
BLOCK DIAGRAM
VERSION-K 07-02-03
FEEDTHROUGH
PATCH
PANNELS
FERMI NATIONAL ACCELERATOR LABORATORY
BOOSTER ACCEL.
LLRF SYSTEM BLOCK DIAGRM
0331.00-LE-282113