BOOSTER ACCELERATOR LLRF SYSTEM BLOCK DIAGRAM 10/16/2014
PAGE 1 OF 2

REV	DESCRIPTION	DRAWN / APPD	DATE
K			
L	Updated Block Diagram to include corrections and new HRM Readback Channels in Crate S90	C. Drennan	9/26/2013
M	Added 0.4 ms pulse generator block to the Beam Gate Generator. Swapped "A" and "B" designations at ENT's.	C. Drennan	2/20/2014
N	Rear Test Stand was removed and new Accel PD and MIPL modules installed in rack BLLRF-5	C. Drennan	10/10/2014

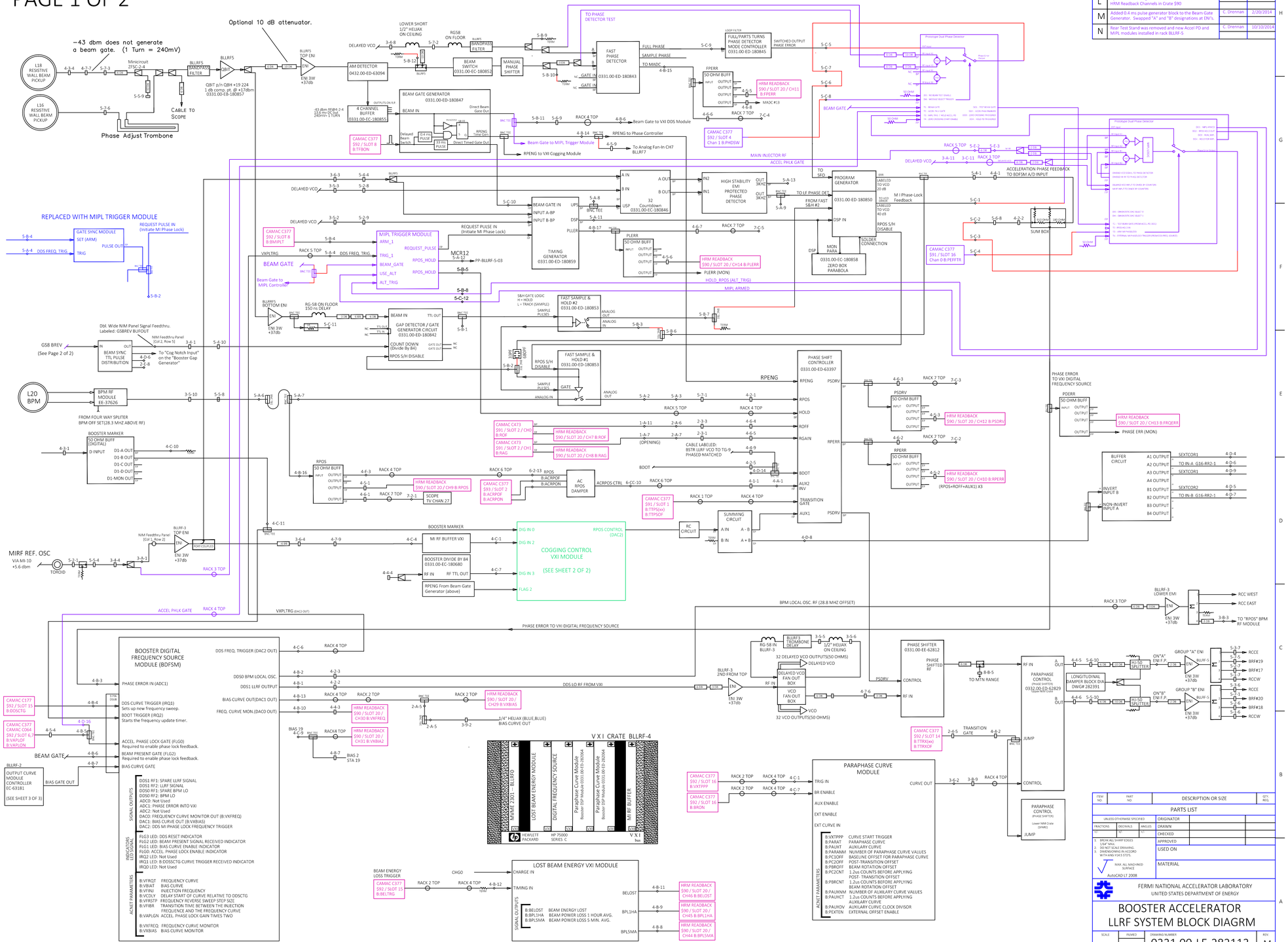

ITEM NO.	PART NO.	DESCRIPTION OR SIZE	QTY. REQ.
PARTS LIST			

UNLESS OTHERWISE SPECIFIED: FRACTIONS ±; DECIMALS ±; ANGLES ±°
1. BREAK ALL SHARP EDGES
2. MATERIAL
3. DO NOT SCALE DRAWING
4. DIMENSIONING IN ACCORD WITH ANSI Y14.5 STDS.
MAX. ALL MACHINED SURFACE
AutoCAD LT 2008

ORIGINATOR / DRAWN / CHECKED / APPROVED / USED ON / MATERIAL

FERMI NATIONAL ACCELERATOR LABORATORY
UNITED STATES DEPARTMENT OF ENERGY

BOOSTER ACCELERATOR LLRF SYSTEM BLOCK DIAGRM

SCALE | FILMED | DRAWING NUMBER 0331.00-LE-282113 | REV M

BOOSTER ACCELERATOR LLRF SYSTEM BLOCK DIAGRAM 10/16/2014
PAGE 2 OF 2

REV.	DESCRIPTION	DRAWN / APPD.	DATE / DATE
K			
L	Updated Block Diagram to include corrections and new HRM Readback Channels in Crate S90 and added Cogging VXI Module block to this page	C. Drennan	9/26/2013
M	Updated Block Diagram to include the Quad Damper and Bunch Rotation modules that connect to the Anode Program.	C. Drennan	2/20/2014
N	Eliminated the Synthesizer Switch Module and 28.8MHz Offset Oscillator Module. Minor corrections to Output Cuve Module Controller inputs.	C. Drennan	10/16/2014

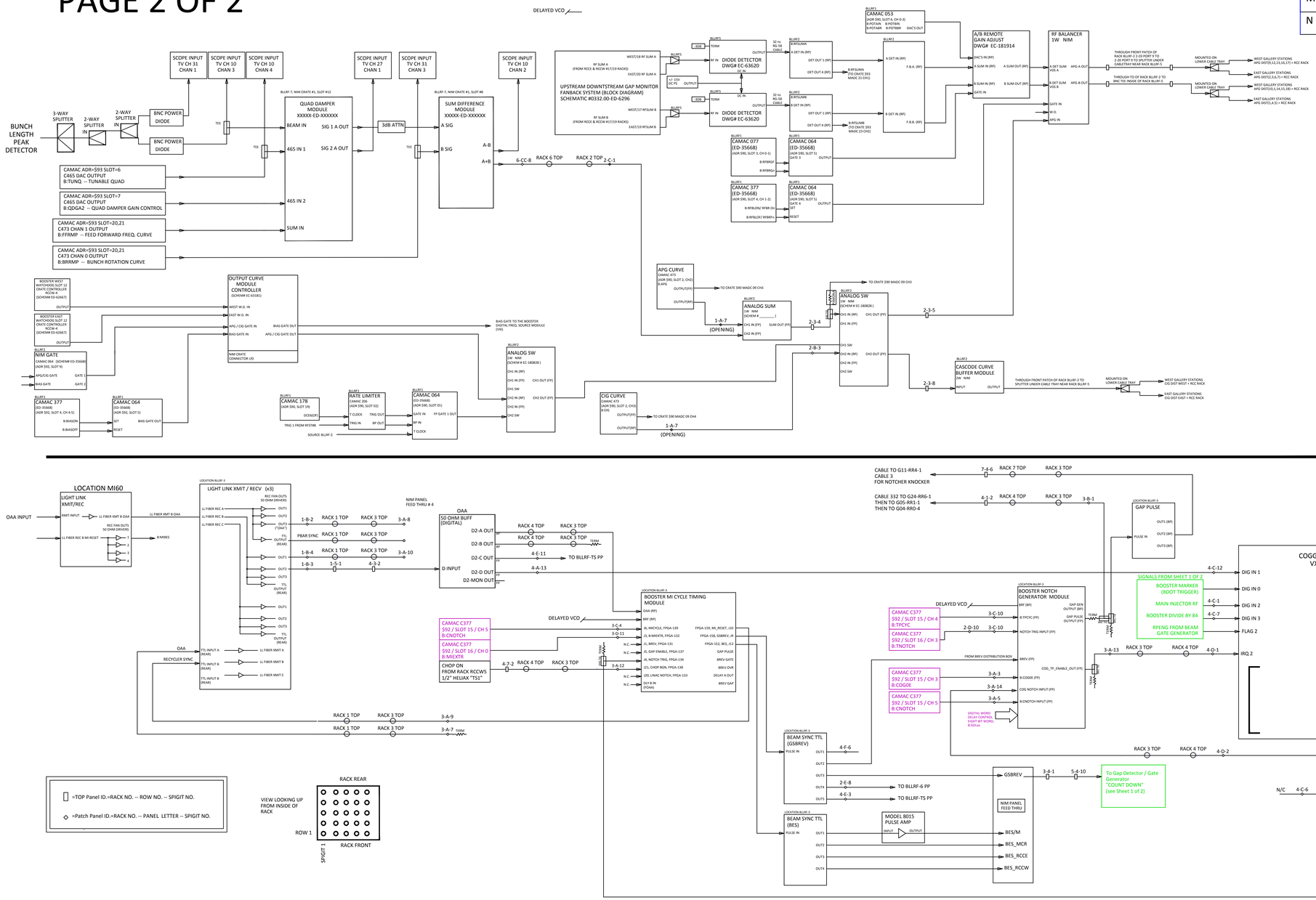

ITEM NO.	PART NO.	DESCRIPTION OR SIZE	QTY. REQ.
PARTS LIST			

UNLESS OTHERWISE SPECIFIED					
FRACTIONS	DECIMALS	ANGLES	ORIGINATOR		
±1/2	±.0	±2°	DRAWN		
			CHECKED		
			APPROVED		
			USED ON		
			MATERIAL		

1. BREAK ALL SHARP EDGES .015 R MAX.
2. DO NOT SCALE DRAWING.
3. DIMENSIONING IN ACCORD WITH ANSI Y14.5 STD'S.

MAX. ALL MACHINED SURFACE

AutoCAD LT 2008

FERMI NATIONAL ACCELERATOR LABORATORY
UNITED STATES DEPARTMENT OF ENERGY

BOOSTER ACCELERATOR LLRF SYSTEM BLOCK DIAGRAM

SCALE	FILMED	DRAWING NUMBER	REV.
		0331.00-LE-282113	N